Project Voss

Preliminary Design Review

500 Allison Road
West Lafayette, IN 47906

Purdue Space Program – Student Launch

November 2020

Table of Contents

Table of Acronyms

Acronym or Abbreviation	Definition
PSP-SL	Purdue Space Program: Student Launch
ASL	Aerospace Sciences Laboratory
BIDC	Bechtel Innovation Design Center
GCS	Ground Control Station
FEA	Finite Element Analysis
CAD	Computer Aided Design
FDM	Fused Deposition Modeling (3D Printing)
PLS	Planetary Lander System (Lander Team)
ABCS	Aero-Braking Control System (Airbrakes Team)
SOS	Self Orientation System
LCS	Lander Control System
PICS	Panoramic Image Capture Subsystem
R&D	Retention & Deployment Subsystem
AGL	Above Ground Level
MSL	Mean Sea Level
COTS	Commercial Off-The-Shelf
NAR	National Association of Rocketry
PPE	Personal Protection Equipment
CFR	Code of Federal Regulations
APCP	Ammonium Perchlorate Composite Propellant
OEW	Operating Empty Weight
R&VP	Requirements and Verification Plans
MFSS	Motor and Fin Support Structure
IFVR	In-Flight Video Recording System

1 PDR Report Overview

1.1 Report Summary

1.1.1 Team Summary

Team Name	Purdue Space Program – NASA Student Launch (PSP-SL)
Team Address	500 Allison Road, West Lafayette, IN 47906
Team Mentor Name	Christopher Nilsen
Team Mentor Email	cnilsen@purdue.edu
Team Mentor Cell Phone	(813)-442-0891
Team Mentor TRA/NAR Certifications	TRA 12041, Level 3 Certified
Hours Spent ON PDR	353 Person Hours

1.1.2 Launch Vehicle Summary

Vehicle Name	All Gas, All Brakes
Target Altitude	4100' AGL
Motor Selection	Cessaroni Technologies Inc. L1115-0
Vehicle Predicted Mass	54.3 lbm
Vehicle Outer Diameter	6.17"
Vehicle Length	87.7"
Vehicle Independent Sections	3
Vehicle Recovery System	Dual Deployment: Apogee and 900' AGL

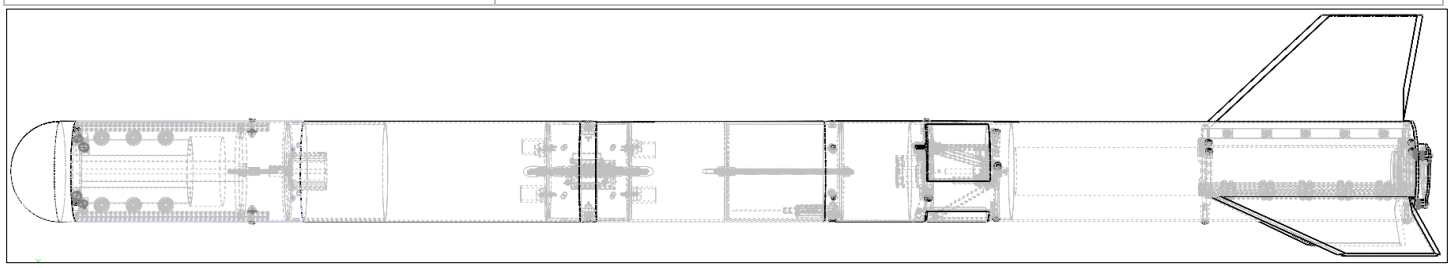

Figure 1.1: Project Voss Launch Vehicle Preliminary Digital Model

1.1.2.1 Launch Vehicle Major Systems

The launch vehicle contains multiple active and passive systems to ensure mission success. These systems include the required Recovery and Payload systems, as well as supporting camera, aerobraking, and thrust structure systems.

1.1.2.2 Recovery Summary

This system will include two altimeters and the drogue and main parachutes used to decelerate the launch vehicle during descent. The other electronic and physical components included in this system will be housed within or on the avionics bay. Black powder ejection charges (activated by the control electronics) will be mounted on either side of the avionics bay. A dually redundant altimeter system will control recovery events and record data throughout the flight. The drogue parachute will be deployed at apogee and the main parachute will be deployed above the required 500', targeting a landing less than 2500' from the initial launch position. Both the primary and redundant altimeters will be commercially available and equipped with independent, commercially available power supplies. This system in general serves to ensure the launch vehicle completes a safe and controlled flight, fulfilling NASA and team-specific requirements.

1.1.2.3 Payload Summary

PSP-SL's 2020–21 Payload experiment has the in-progress title of "*Drag and Drop*," owing to its systems' central design features as well as the classic computing phrase.

The Payload team's systems will be designed to satisfy the competition challenges as well as challenges the team has imposed upon itself. The Payload System comprises of a middle-of-descent deploying Planetary Landing System (PLS)

and an apogee-adjusting AeroBraking Control System (ABCS). These payload experiments will remain completely contained within the vehicle until flight conditions are satisfied for them to become active. Both experiments have been and will be designed to not interfere with the operation of the launch vehicle until their designated operation events are satisfied.

1.1.3 Notable Vehicle Design Features

After observing the procedures in the assembly and launch of the two PSP-SL 2020 launch vehicles, the team discovered numerous fundamental design changes that could greatly improve the vehicle's ease of assembly and testing, in turn resulting in a safer, higher quality vehicle. In addition to procedural changes to be made in the design and construction process, two major features of the vehicle have been modified:

The Project Voss Launch vehicle will make use of a custom aluminum Motor and Fin Support Structure (MFSS).The use of this system will avoid the error historically created during the use of epoxy while attaching the fins and motor tube of the launch vehicle. Since the epoxy is applied in a highly uncontrolled process, additional weight and poor tolerances are inevitable. With a simulation verified, precision machined aluminum structure, the fins, and motor are guaranteed to be fixed in the correct position using the minimum possible material.

Another substantial design feature is the use of a hemispherical nosecone. After research and simulations, it was discovered that in the vehicles subsonic flight regime, the vehicle did not need a nosecone with a high fineness ratio- in fact, the large nose cone of previous years contributed substantial skin drag and dead mass to the vehicle. The hemispherical nose addresses both of these issues by reducing the total wetted area of the vehicle and reducing total vehicle material. The mass saved in this size reduction can then be allocated for new payload and vehicle systems.

1.1.4 Primary Payload

The primary payload will be designed to meet the challenge requirements as outlined in the Handbook. The PLS will consist primarily of a deployable Lander Subsystem and its associated Retention and Deployment Subsystem (R&D). The R&D will be designed to contain the Lander within the payload bay until time of deployment, handing all associated flight loads which would otherwise be transferred through the Lander itself. When activated, the R&D will eject the Lander by mechanical means—without producing an additional independent section of the vehicle; the Lander will be fully deployed from the launch vehicle after the deployment of the vehicle's main parachute and no lower than 500' AGL. Afterward, the Lander will descend to the ground at a non-ballistic rate through the usage of a parachute. Once grounded, the Lander will begin an orientation sequence, uprighting itself within the required bounds. Afterward, the Lander's onboard Panoramic Image Capture Subsystem (PICS) cameras will be activated, take a picture of its surroundings, and transmit the data to the Payload Team's Ground Control Station (GCS) for image processing and display.

1.1.5 Secondary Payload

The secondary payload will be designed to meet the additional technical requirements as outlined by PSP-SL. The ABCS will consist of a mechanical device capable of being integrated with the airframe of the vehicle; this device will act to affect the aerodynamic cross-sectional area of the vehicle after the vehicle's burn has completed, producing increased drag. An internal control system will monitor flight conditions, and through a closed-loop control system, the control system will actuate the mechanical device to produce a desired amount of drag. The control system will predict the current amount of drag required for the vehicle to attain the desired apogee and will modulate the mechanical system to that end. This system is being pursued to increase the team's apogee score—something that the team has not done in previous years. Furthermore, due to the lack of experience with this form of control system on a high-powered rocket, the team has decided to dedicate much effort towards ensuring flight safety and stability.

1.2 Changes Made Since Proposal

1.2.1 Vehicle Design Modifications

The overall design of the vehicle has not been modified since Proposal, as the design was deemed acceptable for the team's mission. Slight modifications include: the vehicle length and therefore mass were increased to make additional

space for the ABCS, and the apogee has been lowered substantially to provide energy margin for the ABCS. In addition, the MFSS and camera systems have seen substantial design refinement for functionality and manufacturability.

1.2.2 Payload Design Modifications

1.2.2.1 Primary Payload

The primary changes to the PLS design since Proposal involve a set of decisions made to meet NASA requirements, not all of which ended up being real constraints that the team would have to consider. To illustrate, per Requirement V2.5, the launch vehicle should not have any more than four independent sections—excluding parachutes and including tethers. While this is a requirement for the vehicle, the team was informed that it meant that the Planetary Lander System would count as an independent section once deployed. This would account for the fourth independent vehicle section, the others being the upper, middle, and lower airframes. However, from further clarification from NASA personnel, the PLS would not be considered an independent section of the launch vehicle, meaning that this constraint was lifted from the team. This is essential context to the changes made below.

When it was originally brought to the Payload Team's attention that the team could not—for instance—detach the nosecone of the vehicle after deployment of the main parachute to deploy the Lander (since it would create a fifth separate element), the team sought alternative solutions to the problem of deployment. These will be outlined in the Payload section. While this clarification in the ruleset has been communicated to the team, the designs proposed under the prior assumptions led to designs that the team felt would be safer and more reliable to the Lander, the vehicle, and onlookers. These designs primarily involve the change away from completely detaching the vehicle's nosecone and tethering it; instead, the team has moved towards constructing an apparatus that could solidly constrain the nosecone after detachment.

1.2.2.2 Secondary Payload

The ABCS has seen substantial technical refinement since Proposal but still aims to provide the vehicle with an accurate apogee through active aerodynamic surfaces deployed during the coast phase.

1.2.3 Project Plan Modifications

The team has made small adjustments to ensure the success of the project given changing external circumstances.

1.2.3.1 Mentor Transition

Since Proposal, the team has welcomed a new project mentor: Christopher Nilsen. Chris has in-depth experience in both model rocketry and the aerospace industry from his time on Collegiate rocket teams and at Purdue University's Maurice J. Zucrow Laboratories.

1.2.3.2 Gantt Chart and Timeline

The team has refined its timeline and is now using a Gantt chart to track milestones and divide tasks within subteams. The timeline on this Gantt chart is extremely aggressive to ensure that the team can complete the competition given the exceptional circumstances presented by the COVID-19 pandemic. Specific issues presented by the pandemic include extended breaks and reduced facility access. One notable feature of the timeline is the early subscale launch. The team plans to launch its subscale vehicle on 11/7/20, to ensure completion by the end of Purdue on-campus instruction.

1.2.3.3 Requirements and Verifications Plans

Since Proposal, the team has completed the creation of its Subteam Requirements. These requirements were created by each subteam to define the criteria that must be met for the subteam to have completed its mission. The complete requirements tables and descriptions of the generation process can be found in Section 6.1.

2 Launch Vehicle Design

2.1 Vehicle Criteria

2.1.1 Mission Statement

For Project Voss, the team will construct a reusable launch vehicle capable of flight to 4100' using formal engineering principles to educate new members through hands-on experience in high-power rocketry and payload design. This vehicle will have a primary Lander payload system, an aerobraking system, and cameras to record inflight footage.

2.1.2 Mission Success Criteria

The construction subteam's mission is to complete all relevant requirements (See Section 6.1.3). A qualitative summary of these requirements is given below.

The Vehicle will maintain stability throughout flight
The Vehicle will safely deploy all recovery systems
The Vehicle will remain as a single unit throughout flight
The Vehicle will land with less than the maximum allowable kinetic energy
The Vehicle will actively control its apogee using an Aerobraking Control System
The Vehicle will be reusable without repairs or alterations
The Vehicle will deploy the payload at the designated altitude
The Team will abide by standard engineering and quality control practices during the design, construction, and launch of the Vehicle

Table 2.1: Construction Subteam Mission Success Criteria

2.2 Vehicle Design

2.2.1 Vehicle System Alternatives

The team considered a large range of system designs for the Project Voss launch vehicle. Below are 2 designs which have significant features that were not included in the final design

2.2.1.1 **Considered Design #1:**

The first considered design was a 6" diameter launch vehicle that was 107" in length. Much of this length came from a 30" nose cone, that was designed with the intent of the payload utilizing this space. The benefit of the nose cone did not seem practical, especially once the payload subteam decided that extra space was unnecessary. The nose cone added nonessential weight and resources, and the team eventually steered away from this design.

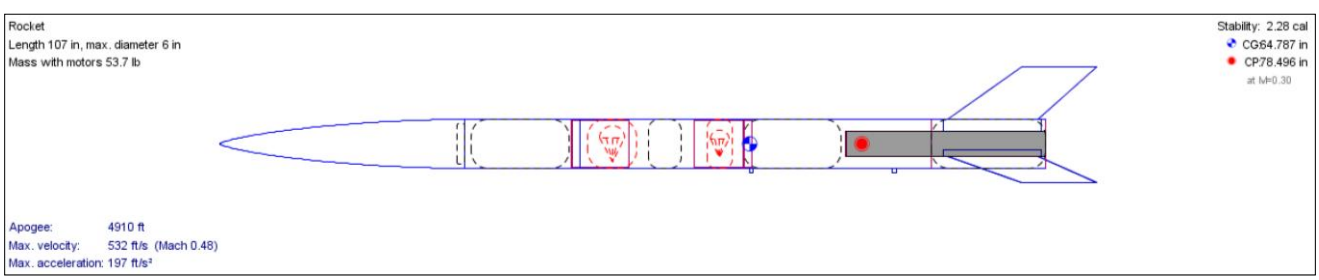

Figure 2.1: Considered Launch Vehicle design #1 in OpenRocket

2.2.1.2 **Considered Design #2:**

The next design was also a 6" diameter launch vehicle that was 81" in length. The reduction in length came from reducing the nose cone from 30" to 10". This was done to save on both weight and resources, while still allotting space in the nose cone for the payload team to incorporate into their design. Another benefit was increasing the stability to 2.57cal, which increased the safety factor and ensured a straight launch under perfect conditions. The design also incorporated three elliptical fins, differing from the trapezoidal fins on the previous design. However, even with the

benefits that this design added, it was deemed unfit to successfully achieve the challenge at hand. Once again, payload found the nose cone space unneeded, which was taking away weight and resources from other components of the launch vehicle. Also, the team decided that elliptical fins were too difficult to manufacture to the precise specifications and were not feasible to include in the chosen design.

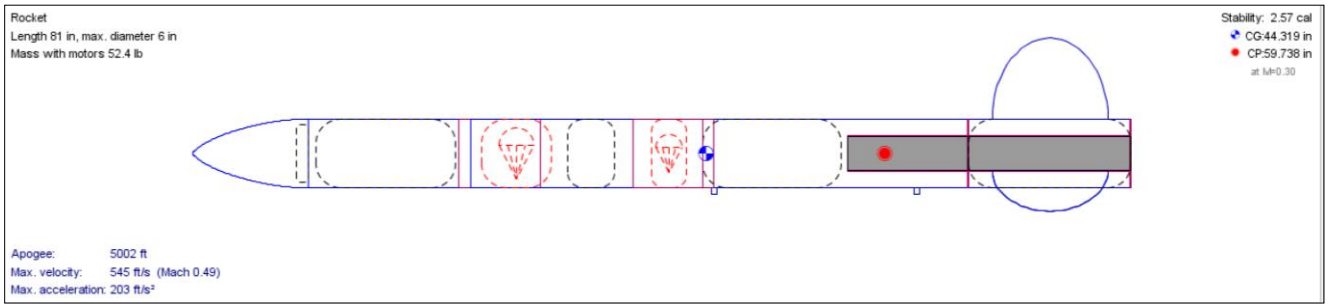

Figure 2.2: Considered Launch Vehicle design #2 in OpenRocket

2.2.2 Selected Vehicle Design

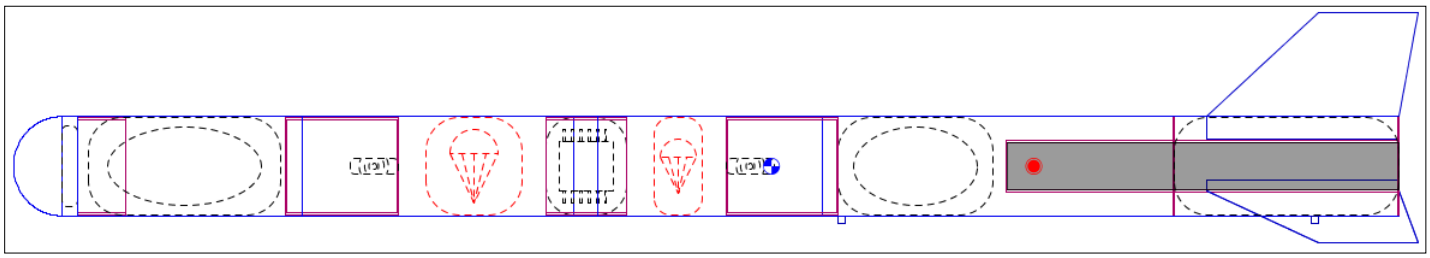

Figure 2.3: Selected Launch Vehicle design in OpenRocket

The chosen design (pictured above) has a 6.17” outer diameter, a 6” inner diameter, and a GLOW of 54.3lbm. The stability of the launch vehicle on the pad is 2.65 cal. Notable elements include a hemispherical nosecone and the MFSS.

When considering the diameter of the rocket, 6” was chosen because it is the narrowest body diameter large enough to house the components. As the diameter increases, the stability decreases, and the mass increases, so it is critical to limit the body diameter to as low as possible.

The vehicle consists of 3 independent sections, colored in figure 2.4. The Payload Section (Blue), the Recovery Section (Green), the Booster Section (Orange). The Payload Section supports the Nosecone, the forward camera systems, the Planetary Landing System, and its Retention and Deployment System. The Recovery Section supports the two parachute bays and the Avionics bay. The Booster Section supports the AeroBraking Control System and the Motor and Fin Support Structure. The 3 independent sections are linked through the parachute shock cords. Each section will be discussed in further detail below.

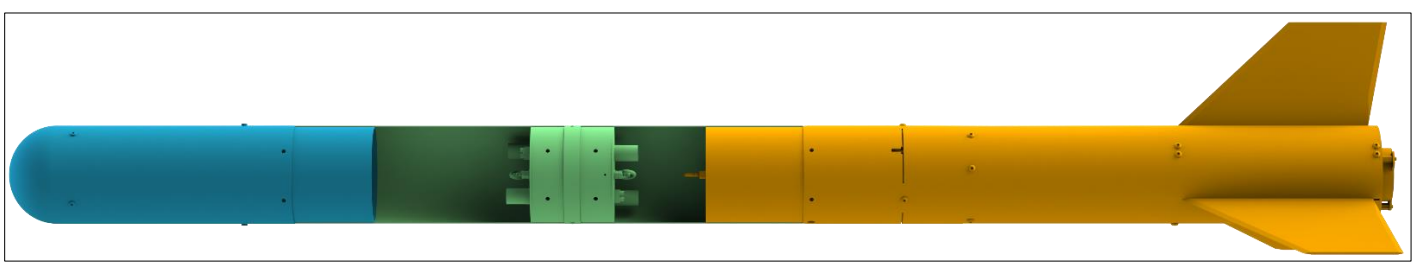

Figure 2.4: Project Voss Launch Vehicle, Colored by Independent Section

2.3 Vehicle Sub-Systems

2.3.1 Motor and Fin Support Structure

2.3.1.1 Design Rationale

In previous years, the team has used an epoxied motor tube and centering ring structure to support the motor and fins. This year, the new Motor and Fin Support Structure (MFSS) has been designed as an alternative to improve the modularity of the launch vehicle, improve mass efficiency, and leverage the team's CNC machining resources. The MFSS is assembled with purely machined aluminum components and commercial off-the-shelf steel fasteners. This design overhaul allows the team to predict the mass of the motor assembly, which is critical not only for apogee predictions but also for an understanding of vehicle stability and impact energy.

The team has put extensive resources into the design and verification of the structure as it is vastly different from past years' designs and must withstand substantial forces. Due to its critical nature, the team is pursuing an accelerated timeline for the MFSS to ensure time for manufacturing. In the following sections, the team provides a detailed description of the MFSS for review.

2.3.1.2 Overall Design

The material chosen for structural parts of the assembly is Aluminum 6061-T6. Al 6061-T6 was chosen because of its high yield and tensile strength, and relative price compared to other aluminum alloys. It is also in good supply in the Bechtel Innovation Design Center, meaning the team will not need to purchase all stock parts but can obtain some of them from the Bechtel Innovation Design Center. The material also has a lower mass density than steel and other aluminum alloys, making this ideal for the application.

The MFSS consists of 6 structural component types. These include the thrust plate, the thrust plate flange, the fin support spar, the upper centering plate, the motor retainer plate, and the #6-32 female standoff.

The thrust plate and thrust plate flange form the thrust plate sub-assembly, with the help of six fasteners that firmly secure the plates together. The role of the thrust-plate sub-assembly is to bear the majority of the thrust loads transferred from the motor's nozzle and the aerodynamic loads transferred from the fins onto the fin support spars and then onto the plate. The thrust plate sub-assembly offloads the stresses onto the Lower Airframe Body Tube through the six radial fasteners and the flange's contact with the bottom of the tube. The thrust plate sub-assembly also centers the motor inside the assembly and the lower airframe. The motor retainer plate is supported by the thrust plate sub-assembly as well, which is attached to the thrust plate component via the six vertical standoffs.

The motor retainer plate has the role of always keeping the motor in place and preventing the motor from exiting the aft of the vehicle by firmly attaching to the three vertical standoffs that are in between the thrust plate sub-assembly and the motor retainer plate.

The role of the standoff components is to attach the motor retainer plate onto the thrust plate and firmly hold the retainer plate in place. Each standoff is vertically placed between the motor retainer plate and the thrust plate sub-assembly and has threaded holes on both ends so that a screw can attach from above and one from below. This type of standoff was preferred over a standoff that is of male-female type since designs of the male-female type do not have a long enough thread on the male end to clear the 4mm deep clearance hole of the thrust plate flange and then be securely attached to the thrust plate's threaded hole.

The fin support spar components, which are three in total, have the role of firmly supporting and attaching each of the fins onto the thrust plate sub-assembly and the upper centering plate and withstanding both the stress and vibration loads transferred from the fins onto them. Each fin support spar has a centered slot that has holes drilled on its sidewalls and attaches to the fin with five fasteners that go through these holes. To ensure the fin will fit tightly into the center slot, the slot has a non-uniform width, being slightly less wide (by 0.1mm) than the fin's thickness near the holes (attachment points to the fin) and wider than the fin's thickness away from the holes. This will allow for removal of material via

sanding from the tighter spots to make the fin fit, if necessary. The fin support spar offloads stress onto the thrust plate sub-assembly and the upper centering plate by being attached to each plate with one fastener, as can be seen in the figures below.

The upper centering plate supports the spars and attaches to each spar with a single radial hole, three in total, and to the Lower Airframe Body Tube with six radial holes. Its role is to withstand and transfer loads from the fin support spars to the Lower Airframe Body Tube, as well as center the motor inside the assembly and the lower airframe.

Figure 2.5: MFSS assembly

Component	Quantity	Material	Single Component Mass (lbm)	Total Mass (lbm)	Construction Method
Thrust Plate	1	Aluminum 6061-T6	0.29	0.29	CNC Milled
Thrust Plate Flange	1	Aluminum 6061-T6	0.35	0.35	CNC Milled
Fin Support Spar	3	Aluminum 6061-T6	0.25	0.75	CNC Milled
Upper Centering Plate	1	Aluminum 6061-T6	0.29	0.29	CNC Milled
Female #6-32 standoff	3	Aluminum 6061-T6	0.0083	0.0249	Off-the-shelf
Motor Retainer Plate	1	Aluminum 6061-T6	0.045	0.045	Waterjet/Laser-cut
#6-32 ANSI Cap Head Screw 0.5" long	9	Steel (ρ = 0.278 lbm/in^3)	0.034	0.306	Off-the-shelf
#6-32 ANSI Cap Head Screw 0.75" long	3	Steel (ρ = 0.278 lbm/in^3)	0.0044	0.0132	Off-the-shelf
1/4-20 ANSI inch Button Screw 0.75" long	12	Steel (ρ = 0.278 lbm/in^3)	0.014	0.168	Off-the-shelf
1/4-20 ANSI inch Cap Head Screw 1.125" long	6	Steel (ρ = 0.278 lbm/in^3)	0.022	0.132	Off-the-shelf

1/4-20 ANSI inch Cap Head Screw 1" long	15	Steel (ρ = 0.278 lbm/in^3)	0.02	0.3	Off-the-shelf
1/4-20 ANSI inch Nut Hex	15	Steel (ρ = 0.278 lbm/in^3)	0.0071	0.1065	Off-the-shelf
Total Component Mass:				1.7499	
Total Fastener Mass:				1.0257	
Total Top-Level Assembly Mass				2.7756	

Table 2.2: Bill of Materials for the MFSS Assembly

The team considered both steel or aluminum fasteners for MFSS. The advantage of steel fasteners is their higher yield and tensile strengths, and lower cost vs their aluminum counterparts. However, they are denser than equivalent aluminum fasteners, increasing the total mass of the assembly. The team decided to use steel fasteners because the total system mass was within the mass margin of the lower airframe assembly, so the additional cost of aluminum fasteners was not justified.

2.3.1.3 **Components and Subassemblies:**

The following section provides an in-depth description of each component of the MFSS.

2.3.1.3.1 Thrust Plate Subassembly

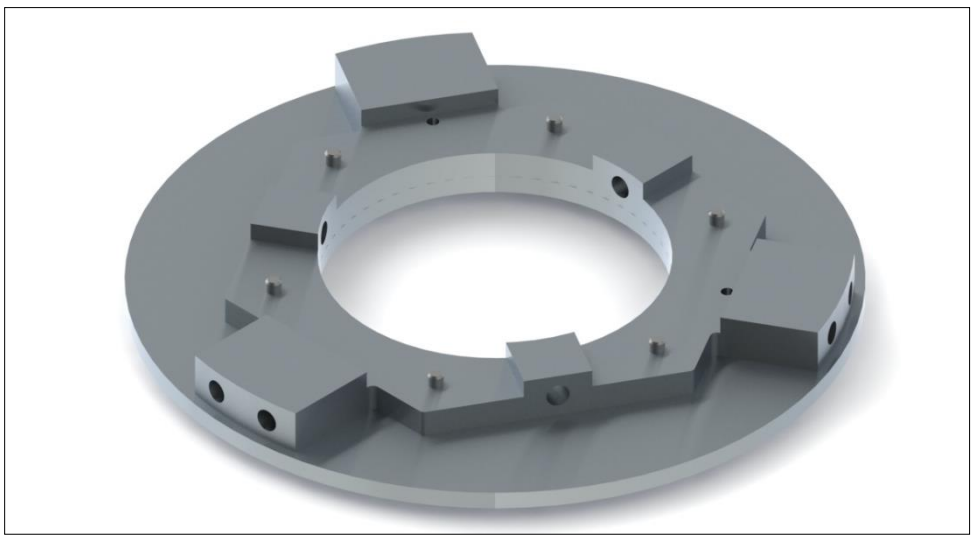

Figure 2.6: Thrust Plate Subassembly

The thrust plate subassembly consists of two components: the thrust plate, and the thrust plate flange. The components are separated to improve overall manufacturability, as a single part in place of this subassembly would be very complicated to manufacture.

2.3.1.3.2 Thrust Plate design characteristics:

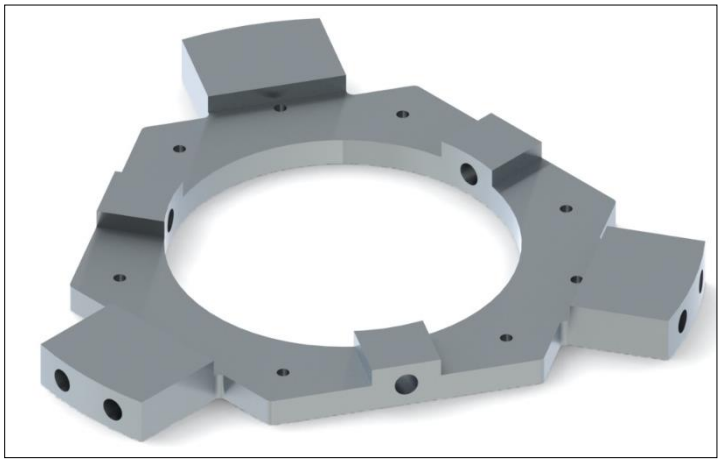

Figure 2.7: Thrust Plate

The thrust plate has the shape of a hexagon with three spokes and an inner circular hole. The plate is 10mm thick at the spokes and fin spar connection "blocks", while it is 6mm thick at the thinner regions. The inner hole has a diameter of 75mm, which is the motor case diameter. The hexagon has an inscribed reference circle with a diameter of 103mm. The spokes are 30mm wide and each has two radial threaded ¼-20 ANSI inch holes. These six holes in total support the thrust plate onto the lower airframe body tube and transmit the stress loads from the plate to the ¼-20 screws and then onto the lower airframe body tube. There are also six vertical threaded #6-32 ANSI equally-spaced threaded holes (each midway between the edge of the hexagon and the inner circle) that connect the flange to the thrust plate and transmit stress loads to the screws and between the thrust plate and the flange. There are also three vertical threaded #6-32 ANSI holes that are equally spaced, and each is drilled close to a spoke. These three holes are used to connect the plate to the standoffs that are in turn connected to the motor retainer. Last, there are three radial equally spaced threaded ¼-20 ANSI inch holes, one on each 15mm wide protruding "block", that connect the plate to the lower side of each fin support spar.

The thrust plate has been designed to withstand all expected stress loads with a minimum factor of safety of 2. Preliminary FEA predicts the safety factor will be even greater than that, with the main constraining factor being the loading on the fiberglass booster section.

2.3.1.3.3 Thrust Plate Flange design characteristics:

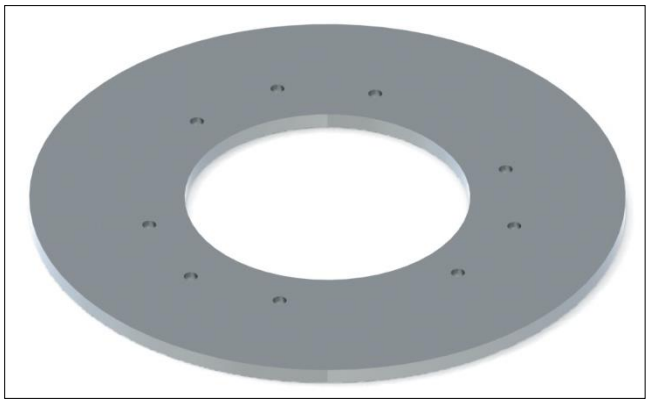

Figure 2.8: Thrust Plate Flange

The flange has the shape of a washer. The thrust plate flange is 4mm thick and has an inner diameter of 75mm and an outer diameter of 6.17", equal to the lower airframe body tube outer diameter. The flange transmits stress loads to the lower airframe body tube by touching the bottom end of the tube. This design greatly reduces the observed stress from Static Study simulations without a flange on and around the six ¼-20 holes on the tube, making sure there is a more

uniform stress transmission from the thrust plate to the lower airframe body tube. Also, the design is easily manufacturable and can be waterjet cut at the Bechtel Innovation Design Center.

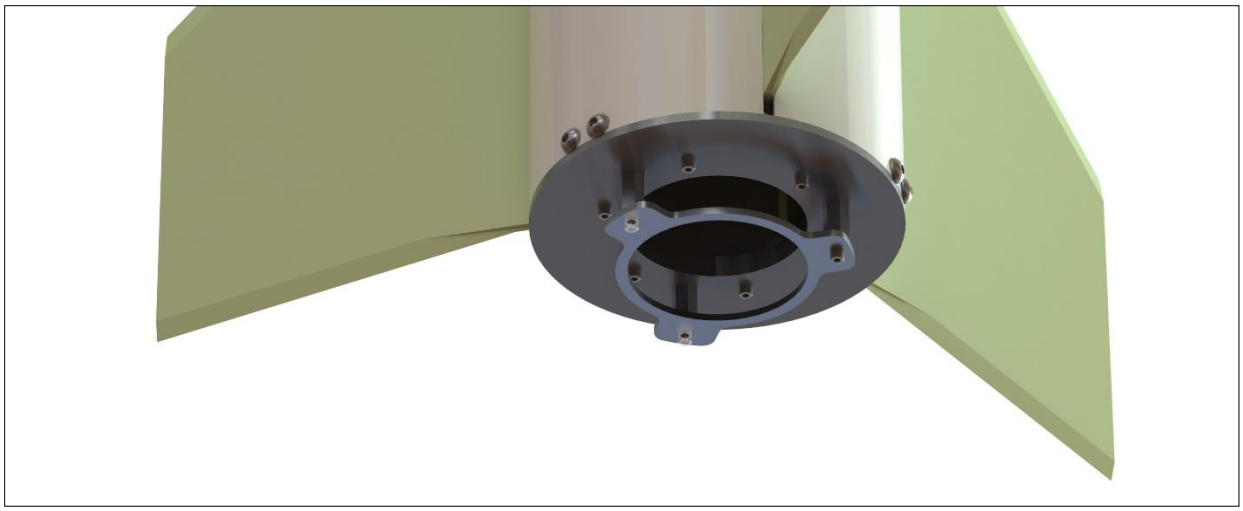

Figure 2.9: Thrust Plate Flange Interface with Lower Airframe Body Tube

Furthermore, the flange has been designed to be attached to the bottom side of the thrust plate with six vertical #6 ANSI equally spaced clearance holes (each aligned with their respective holes in the thrust plate) that connect the flange to the thrust plate and transmit stress loads to the screws and between the thrust plate and the flange. Note that the screw head of each of these #6-32 screws is in contact with the flange's bottom side. There are also three vertical #6 ANSI clearance holes that are equally spaced, through which a screw goes in that then attaches to the standoffs underneath the flange.

2.3.1.3.4 Upper Centering Plate design characteristics:

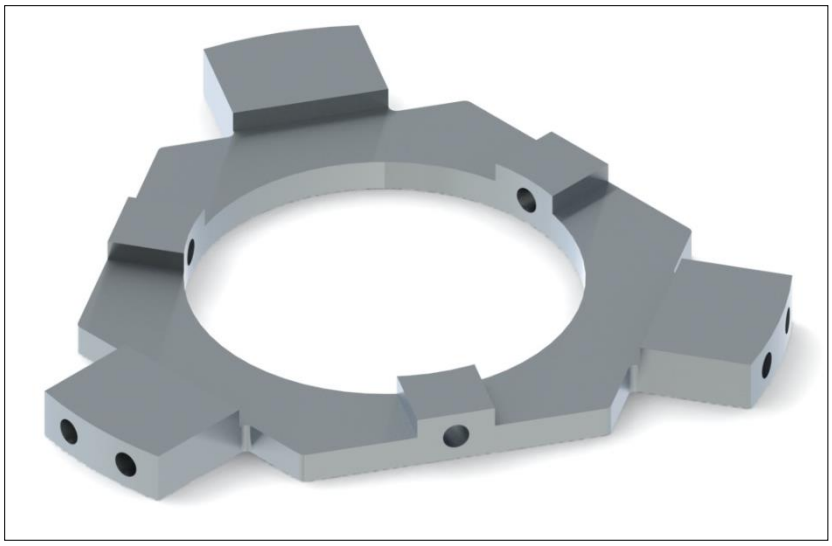

Figure 2.10: Upper Centering Plate

The upper centering plate is very similar to the thrust plate, the only difference being that the upper centering plate has no vertical threaded #6-32 ANSI holes. The upper centering plate has the shape of a hexagon with three spokes and an inner circular hole. The plate is 10mm thick at the spars and the fin spar connection "blocks", while it is 6mm thick at the thinner regions. The inner hole has a diameter of 75mm, which is the motor case diameter. The hexagon has an inscribed reference circle with a diameter of 103mm. The spokes are 30mm wide and each has two radial threaded ¼-20 ANSI inch holes. These six holes in total support the upper centering plate onto the lower airframe body tube and transmit the stress loads from the plate to the ¼-20 screws and then onto the lower airframe body tube. Last, there are three radial

equally spaced threaded #10-24 ANSI holes, one on each 15mm wide protruding “block”, that connect the plate to the upper side of each fin support spar.

The upper centering plate has been designed to withstand all expected stress loads with a minimum factor of safety of 2.

2.3.1.3.5 Fin Support Spar design characteristics:

Figure 2.11: Fin Support Spar

The fin support spar has been designed to replace the initially proposed twin spars subassembly to simplify the design and improve the manufacturability of the part and the assembly in total. The single spar instead of the twin spars initially considered also performs better in Static Study simulations. Another design change is that there are five holes per spar instead of three initially, to ensure that the fin is more firmly attached and that stresses from the fin towards the spar and the thrust and centering plates are more evenly distributed. Also, there are inner protrusions, wherever there is a hole that attaches the fin to the spar, within the slot that has a gap between them which is 0.1mm thinner than the 0.1875” thick fins. This will ensure that the fins will fit tightly and will also allow for material removal via sanding if necessary, at these protrusion points.

The spar has a total height that is equal to twice the thickness of the centering and thrust plates (2*10 mm = 20mm) plus the fin root chord length of 12”. There is one ¼-20 ANSI inch clearance hole on the bottom and one on the top (two in total), which are centered in the 10mm high sections, and a centered 12” long and 0.1836” wide slot at the hole attachment points. There are also five ¼-20 ANSI inch through-body clearance holes on the side of the spar, which are used to attach the fins onto the spar and transmit the stress loads from the fins onto the screws and the spar in turn. The stress is then transmitted to the attachment points on the “blocks” of the upper centering plate and the thrust plate.

2.3.1.3.6 Motor Retainer Plate design characteristics:

Figure 2.12: Motor Retainer Plate

The motor retainer plate is a 1/8" thick plate that supports the motor from falling out of the bottom. It has an inner circular hole with a 75mm diameter, and an outer circular diameter of 85mm on the "ring", which has a width of 5mm. The plate also has three spokes, 15mm wide each. The diameter of the reference circle passing from the tips of the spokes is 4.5". There are also three vertical, equally spaced #6 ANSI clearance holes, through which the screws pass to attach onto the standoffs above the plate. Note that the screw heads touch onto the bottom side of the motor retainer plate. Also, the plate is highly manufacturable, being thin enough to be either laser-cut at the Bechtel Innovation Design Center or water-jet cut.

2.3.1.3.7 Assembly Procedure

The thrust structure is to be assembled according to the following procedures.

1.	The thrust plate sub-assembly is pieced together (thrust plate and flange).
2.	The retainer standoffs are first secured to the thrust plate assembly with three #6-32 screws.
3.	Each fin is attached to a spar with five ¼-20 ANSI inch screws and five hex nuts.
4.	Each spar ¼-20 ANSI inch upper hole is then connected to a "block" on the upper centering plate and each spar lower ¼-20 ANSI inch hole is connected to a "block" on the thrust plate.
5.	The MFSS assembly is complete, except for the motor retainer, and is inserted into the lower airframe body tube from the bottom, where it is fastened with six ¼-20 ANSI inch bottom head screws on the thrust plate and six ¼-20 ANSI inch button head screws on the upper centering plate.
6.	The assembled motor is inserted through the inner 75mm diameter holes of the thrust plate and the upper centering plate.
7.	The motor retainer plate is secured onto the standoffs with three #6-32 screws.

Table 2.3: MFSS Assembly Procedure

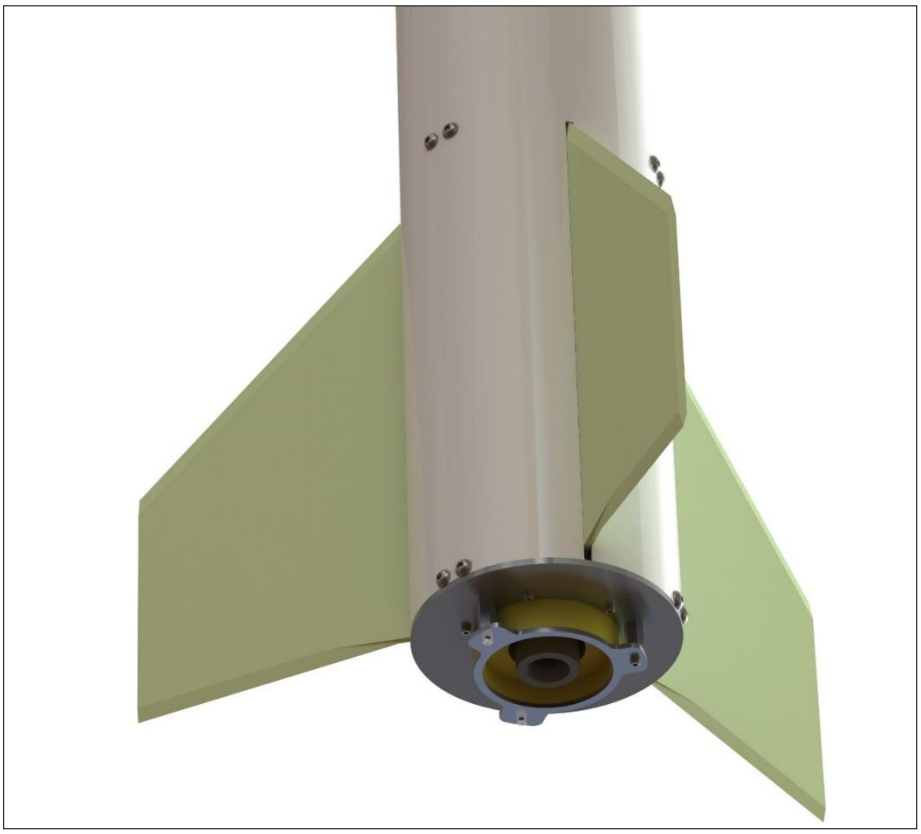

Figure 2.13: Installed MFSS

2.3.2 Motor Selection

The primary motor candidate is the Cesaroni Technology Inc. (CTI) L1115. This motor was one of three candidates researched for potential application in the launch vehicle's design. Among the other two options were the CTI L1685 and Aerotech L1365 motors. The three primary options were selected through vigorous research on L class motors. The current design of the launch vehicle requires at most an L-class motor to lift its expected mass. Additionally, price and impulse comparison were two criteria used to narrow the motor choice down to just three options. For the CTI L1115, flight data and design from the previous year's launch was considered. The CTI L1115 was used in the 2020 SL competition and successfully fulfilled all its objectives during launch, proving the motor's reliability. Beyond prior data, the three model candidates were compared under criteria such as price, specific impulse, burn time, loaded weight, and average thrust. The CTI L1115 consisted of the lowest weight while maintaining a high specific impulse when compared to the other models. Reduced weight at the bottom of the launch vehicle ensures greater overall stability. Additionally, greater specific impulse generates improved efficiency in the motor, signifying improved thrust per motor mass.

The CTI L1115 uses Ammonium Perchlorate composite propellant (APCP). The motor costs $293, has a specific impulse of 213.6 seconds, a burn time of 4.48 seconds, a loaded weight of 154.14oz, an average thrust of 251.78lbf, and a thrust-to-weight ratio of 26.14. The CTI L1685 has a cost of $355, a specific impulse of 137 seconds, a burn time of 3.01 seconds, a loaded weight of 211.79oz, an average thrust of 379.31lbf, and a thrust-to-weight ratio of 28.67. The Aerotech L1365 motor has a cost of $293, a specific impulse of 184.01 seconds, a burn time of 3.5 seconds, a loaded weight of 173.12oz, an average thrust of 306.86lbf, and a thrust-to-weight ratio of 28.36. Notably, the CTI L1685 and Aerotech L1365 motors have better thrust-to-weight ratios than the CTI L1115. The minute improvement of this characteristic over the proven CTI L1115 motor did not warrant a reasonable change in motor selection. In summary, the CTI L1115 was chosen for its historical reliability, lowest overall weight, and greatest specific impulse.

2.3.3 Fin Design

Due to the new technology being implemented in the MFSS and elsewhere in the vehicle, the team has opted for a similar fin configuration as previous years. The vehicle is passively stabilized during the boost phase by 3 trapezoidal fins

mounted at the rear. The fins have been designed to maximize stability while minimizing drag. Manufacturability and structural integrity are also an integral part of their design, hence the root chord length of 12” and their 0.1875” thickness, which have been proven to be effective from previous designs. Their shape is swept-back trapezoidal. Each fin is made of G-10 Fiberglass and manufactured by a commercial provider utilizing waterjet cutting and belt-sanding for the chamfers on the leading and trailing edge. Their design characteristics are:

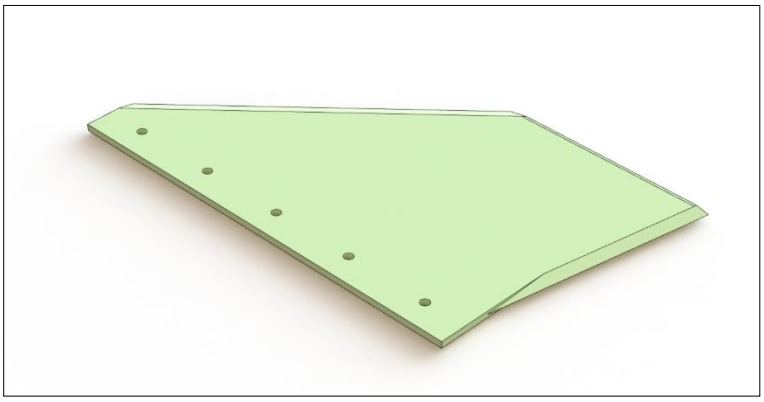

Figure 2.14: Swept-back trapezoidal fin design

Fin Design Parameter	Value
Root chord length	12”
Tip chord length	6.2”
Height	6.5”
Sweep length	7.0”
Sweep angle	47.1deg
Thickness	0.1875”
Fin tab height	1.5”
¼” holes count	5
¼” holes separation distance center-to-center	60.96mm
Fin component mass (single fin)	0.9lbm

Table 2.4: Fin Design Parameters

2.3.4 Nose Cone

One of the most obvious features of the launch vehicle’s design is the use of a hemispherical nosecone. Post-flight analysis of the Project Casper launch vehicle has revealed that its 6:1 Von Kármán nose cone significantly reduced the vehicle’s useful mass fraction due to its large wetted surface area and substantial weight. While forward weight is desirable for the stability of the launch vehicle, the team would prefer this mass fraction be used on systems that more directly support the team’s mission. One of these systems is a set of self-contained cameras that will record the flight for diagnostic and outreach purposes.

The team intended to determine the optimal low-fineness ratio nosecone through a comparison of many commercially available options but discovered that no high-power rocketry suppliers stock nose cones with fineness ratios of less than 4:1. The two options considered were a commercially available 4:1 Ogive, and the custom manufacture of a hemispherical (1:2 elliptical) nose cone. Both options had very similar drag characteristics at the speeds expected during the vehicle's flight and differed only in shape, weight, and customizability. The hemispherical nose cone had less dead weight, allowed for better camera integration, and had comparable drag characteristics.

The selected nose cone design is a 3D printed 6” diameter hemisphere with a 1” shoulder. Portions of the nosecone will be made of acrylic to allow line-of-sight for the onboard camera system. While the team would prefer polycarbonate due to its shatter-resistance, there are limited sources of curved polycarbonate available at acceptable prices. All efforts will be taken in the design to minimize the amount of acrylic present, and to ensure that the airflow over the nosecone is as

uniform as possible. Components for the nose cone will be 3D printed out of carbon fiber reinforced nylon on BIDC's Markforged Mark Two printers.

2.3.5 Inflight Video Recording (IFVR) System

The launch vehicle will contain 3 camera systems for recording in-flight footage. The cameras will face outward, forward, and aft. Each camera module will consist of a battery, a Raspberry Pi Zero, and a camera. The battery choice will either be a lithium-ion battery or a lithium polymer battery, depending on the size, capacity, and modularity available. Furthermore, the cameras will be set up to a key switch system such that the cameras will turn on and begin recording as soon as the key switch is activated immediately before launch. LEDs will be hooked up to the Raspberry Pis as well that will turn on when the cameras are on so that the function of the cameras can be confirmed before launch.

2.3.5.1 IFVR Component Selection

It has been decided that the outward and forward-facing cameras will be contained in the nosecone. The camera to be used for these systems is an Arducam Camera Module, to be shot at 60fps and 1080P. These cameras are of fairly high quality and low weight, making them a very good choice for the nosecone. The camera and computer systems will be secured to the base plate of the hemispherical nosecone and pointed out of the acrylic sections of the nosecone.

The aft camera, either in the nosecone or in the booster section above the ABCS, will be protruding out of the body of the launch vehicle to capture diagnostic footage of the ABCS. The aerodynamics effect of the camera will be minimized by an aerodynamic covering that will sit over the camera, as well as a dummy aerodynamic covering radially opposite of the camera to maintain vehicle aerodynamic symmetry. This camera will be a 120 Raspberry Pi Zero Camera Module, selected due to its reduced size compared to the Arducam. This camera will record footage at 1080P and 48 fps.

2.3.5.2 IFVR Testing

A three-hour recording test was conducted. The camera began recording and was connected to a multimeter to gauge the power draw of the cameras as well as confirm their ability to function for prolonged amounts of time. The camera successfully functioned for three hours within a freezer (to simulate past launch temperatures) and drew an average of 0.267 Amps and 5.069 Volts over the three hours, confirming that standard batteries contain more than enough capacity to film for three hours straight. This confirms that the camera system can remain on the launchpad for three hours before launch, as project requirements.

A five-minute series of recording tests were also conducted. These tests experimented with various resolutions, lighting conditions, and frames per second (fps). The settings identified as being ideal were 60fps, 1080P for the Arducam, and 48fps 1080P for the 120 Raspberry Pi Zero Camera. The change in fps for the second camera was due to the discoloration of the video at 60fps. The footage was evaluated qualitatively by the IFVR team.

2.4 Avionics and Recovery System

2.4.1 Avionics and Recovery Criteria

2.4.1.1 Mission Statement

The mission of the avionics and recovery subteam is to design, build, and verify an electronic system capable of controlling the dual deployment recovery of the Project Voss launch vehicle. To ensure the proper sizing of these components, the team is using custom vehicle trajectory simulation in parallel with COTS software including OpenRocket.

2.4.1.2 Mission Success Criteria

The avionics and recovery mission will be accomplished if all subteam requirements are completed, as listed in Section 6.1.4. Key tasks include the on-time and controlled deployment of the parachutes, the successful operation of altimeter data collection and deployment functions, and whether the vehicle is ready for reuse after landing.

2.4.2 System Overview

The avionics and recovery system includes the avionics bay and parachute deployment system of the vehicle. The avionics bay will hold the primary and redundant altimeters along with their corresponding batteries. Once the vehicle reaches apogee, the drogue parachute will deploy using a black powder ejection system. Once the vehicle has descended to a certain altitude AGL, the main parachute will deploy also using a black powder ejection system. Each parachute's ejection system will also have redundant charges to ensure a successful deployment. All avionics system components will be activated using dedicated switches before launch.

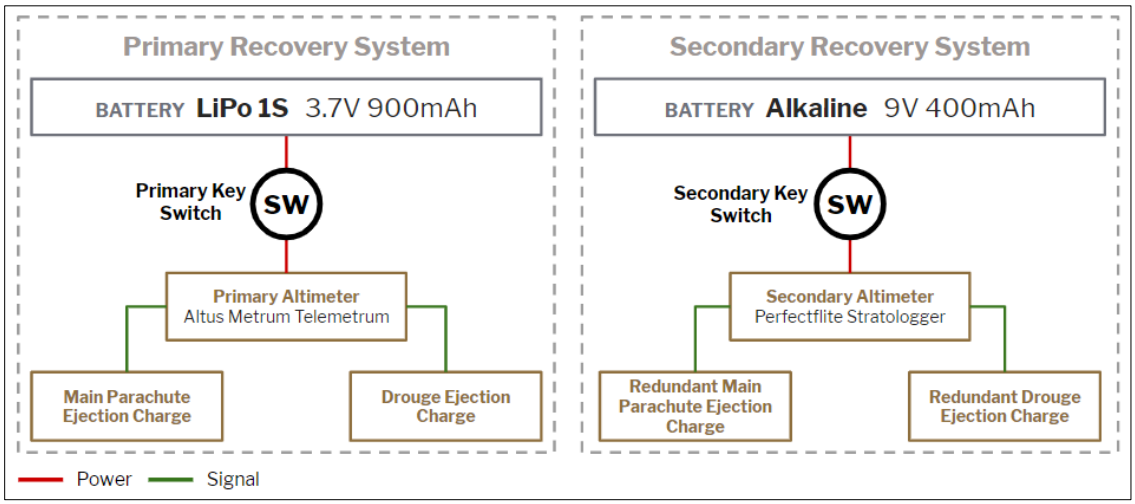

Figure 2.15 Avionics Wiring Diagram

The wiring diagram above shows the primary and redundant systems within the avionics bay. These systems will be nearly identical and redundant in design to ensure the ejection of the drogue and main parachutes during flight. Each system will use a different make/model of altimeter and a different type of battery to reduce the risk of a single failure mode affecting both systems. The selection process for each component is outlined in the following sections.

2.4.3 Components and Alternatives

2.4.3.1 Coupler

All avionics hardware will be housed in a coupler with an inner diameter of 5.775", an outer diameter of 5.998", and a length of 5". These dimensions were chosen as they provided the necessary space for all planned avionics hardware while also reducing the amount of unnecessary material in the launch vehicle. The coupler will include two ½" holes for access to the key switches used for the altimeters, four corresponding holes used to secure the switch holders to the coupler with ½" 6-32 screws and hex nuts, 12 ¼" holes for attaching the coupler to the upper and lower recovery sections, and 4 #8 static port holes on the forward end of the coupler to allow the altimeters to determine current altitude.

2.4.3.2 Switch Band

The switch band will have an inner diameter of 6.00" and an outer diameter of 6.17" (allowing it to slide over the coupler), and a length of 1" (allowing it to accommodate the key switch holes while adding as little additional length to the vehicle as possible). Likewise, it will have ½" holes for accessing the key switches and four holes for the 6-32 screws and hex nuts.

2.4.3.3 Primary and Redundant Altimeters and Batteries

The primary altimeter will be the Altus Metrum TeleMetrum, which operates with a 3.7V LiPo battery. This altimeter was chosen because of its high reliability in many past launches as well as its GPS/live telemetry capabilities. The redundant altimeter will be the PerfectFlite StratoLoggerCF, which differs from the Missile Works RRC3+ Sport used in past years. This change was made due to configuration changes in the vehicle that necessitated a relatively short avionics bay (5" in

length), so the RRC3+ Sport would be a tight fit. The StratoLoggerCF is much shorter (only 2”) and has all of the capabilities of the RRC3+ Sport, so it was chosen instead to serve as the redundant altimeter.

Alternatives for the redundant altimeter include the Altus Metrum EasyMini, which offers essentially the same capabilities as the StratoLoggerCF and is even shorter in length (1.5”). However, it is more expensive and also of the same make as the TeleMetrum. The team prioritizes utilizing two altimeters of different makes/models in order to increase the likelihood that if a failure occurs in the primary system, the same one will not also occur in the redundant system, resulting in catastrophic failure.

2.4.3.4 **Ejection Charges**

The ejection charge type that will be used is FFFFg black powder stored in black powder canisters on the bulkheads of the avionics bay. Each bulkhead supports the ejection canisters for either the drogue or the main parachute and will have both a primary and a redundant charge in separate canisters. The forward charges will eject the main parachute, and the aft charges will eject the drogue parachute. These charges have been sized based on the interior volume of the airframe on either side of the avionics bay. The redundant charges will contain 1g more of black powder to ensure ejection occurs at the expected times in flight. Black powder was chosen as the ejection charge because it is relatively lightweight, quite reliable, has been used successfully in many past launches, and avoids the use of highly regulated high-pressure gas. The team avoids the use of pressurized gas ejection systems due to the regulatory complexity around their use. The ideal calculated amounts of black powder to use are 3g for the primary charge for the main parachute, 4g for the redundant charge for the main parachute, 2g for the primary charge for the drogue parachute, and 3g for the redundant charge for the drogue parachute.

The ejection charges and parachutes have been located such that the detonation of the ejection charges forces the parachutes onto a coupler bulkhead, breaking the shear pins and releasing the parachute. This is in contrast to last year, where the ejection charges forced the parachute deep into a section of the vehicle, increasing deployment time and risk of deployment failure.

2.4.3.5 **Switches**

Key switches will be mounted on radially opposite sides of the coupler and allow for the activation of the avionics systems. Key switches were selected as they cannot be deactivated without a key, preventing accidental in-flight disarmament. The switches will be located entirely within the coupler to reduce their aerodynamic effect and prevent damage upon landing. These key switches replace previously used rocker switches, which had a high risk of in-flight disarmament.

2.4.3.6 **Switch Holder**

In order to secure the key switches to the interior of the coupler, a 3D printed switch holder with a curved face that matches that of the inner diameter of the coupler will be used for each one. Each will have two screw holes to allow it to be attached and a recessed area to prevent any accidental disarmament of the switch. Previously, the switch holder was epoxied to the coupler to secure the switch in place. In order to maintain a more accurate estimate of weight and to permit the exchange of switch holders, the epoxy was replaced with screws.

2.4.3.7 **Altimeter Sled**

To support the two altimeters and respective power systems, a 3D printed support structure known as the altimeter sled was designed to mount between the two threaded rods that run axially down the avionics bay. Each side features mounting areas for each altimeter and a compartment for each battery.

There are several alternative arrangements for the components which are mounted on the altimeter sled. Both altimeters and batteries could be mounted together on opposite sides, although this would make the wiring more difficult. Therefore, the final design has one altimeter and one battery to a side. The team will be revisiting the sled design before CDR to ensure optimal usage of additive manufacturing technology.

2.4.3.8 Battery Guard

The battery guard is a complementary piece that will secure each battery into the altimeter sled and also offer limited protection in the case of battery failure. While many alternatives exist, the present design of the battery guard makes use of the benefits of 3D printing, such as a lack of steep overhangs and a flat surface to act as the bottom face. The current battery guard design is also readily integrated with the altimeter sled and threaded rods and allows for commonality between the parts, reducing the complexity when assembling the avionics bay.

2.4.3.9 Attachment Hardware and Heat Shielding

The drogue parachute will be attached to a 30' long, 3/8" wide tubular Kevlar shock cord, while the main parachute will be attached to a 60' long, 3/8" wide tubular Kevlar shock cord. The shock cords will be attached to the parachutes and bulkhead eyebolts via ¼" quick links. To protect the parachutes from hot ejection charge gases, an 18" to a side square Nomex blanket will wrap around each the drogue and main parachutes when they are packed inside the airframe.

2.4.3.10 Tracking Devices

The primary tracking device of the launch vehicle will be the TeleMetrum altimeter, which contains a 70cm ham-band transceiver for telemetry downlink as well as an on-board, integrated GPS receiver. The output power of the RF transceiver is 40mW, and the specific frequency used by the team will be 434.55MHz. From past experience, it is known that the transmitter on the TeleMetrum has a range of at least one mile and is very reliable in establishing and maintaining a connection to the ground station during flight. This connection (to a standard laptop) will be made using a TeleDongle and Yagi Arrow 3 Element antenna.

All major vehicle sections (tethered or otherwise) will be equipped with active GPS tracker/transmitters. These will provide constant position information for the entire vehicle during flight, easing recovery in case of an accident. In the previous year's project, the team temporarily lost a section of the launch vehicle due to lower-than-expected cloud cover and shock cord failure. While the section was recovered a month later, the team has decided that to avoid any risk of section loss, COTS GPS tracking modules will be added to each independent vehicle section (in this case this meant adding trackers to the Payload and Booster sections). The team has selected the EggTimer Rocketry EggFinder system as it provides long-range tracking, low weight, and low power consumption. The team has created a 3D printed housing that contains the GPS module, battery, and a key switch. The selected battery is expected to provide enough energy for greater than 4 hours of tracking, enough for 2 hours of pad time, and 2 hours of vehicle location time. There will be two of these modules in the final vehicle, one in each of the breakpoint couplers, where they will not interfere with other vehicle systems. One of the assembled tracking modules can be seen in figure 2.15.

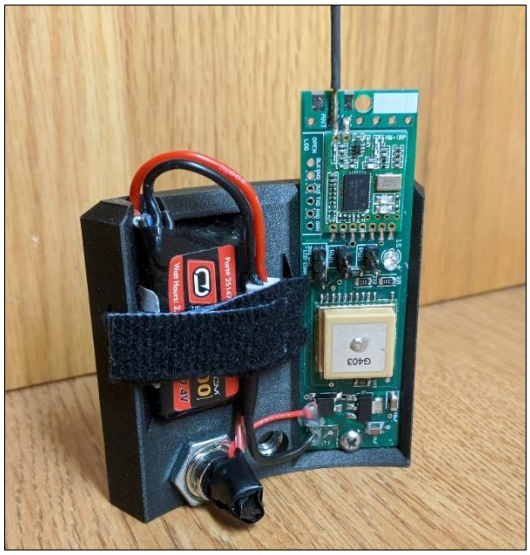

Figure 2.16: Complete GPS Tracking Module

2.4.4 Parachute Sizing

The selected drogue parachute is a 24” diameter Fruity Chutes Classic Elliptical parachute. This parachute was chosen because it is especially compact and lightweight, and it has a relatively high drag coefficient for its size (1.55). It was also used last year with great success. The main parachute that will be used is a 144” diameter Rocketman High-Performance CD 2.2 parachute, which differs from the 120” SkyAngle CERT-3 XXL parachute used last year. The reason this change was made was that it was retroactively determined that the SkyAngle parachute was undersized for the vehicle last year, and the team is planning to size the vehicle similarly this year. Therefore, a search was made for a larger main parachute that was not excessively expensive. Considering factors such as cost, diameter, and maximum vehicle weight, the search was narrowed down to the aforementioned Rocketman parachute. This parachute can support a vehicle with a maximum weight of around 54lbm, is also quite compact and lightweight, and has a strong listed drag coefficient (2.2). Both parachutes are made of 1.1oz ripstop nylon.

Alternatives for the main parachute included similarly sized parachutes from Fruity Chutes and larger parachutes from Rocketman. The cost of the Fruity Chutes parachutes was much too high considering the allocated avionics and recovery budget, so they were quickly removed from consideration. In terms of the larger Rocketman parachutes, though they would be able to support a heavier launch vehicle, their packing volumes were too high and there were concerns that they would need an excessively large vertical distance to fully open during descent. With the current designed vehicle weight, the chosen 144” diameter Rocketman High-Performance parachute was verified with the Simulink simulation to balance the maximum landing kinetic energy and maximum descent time requirements while not having the aforementioned issues of the larger Rocketman parachutes. Therefore, it was chosen as the main parachute to be used with this launch vehicle.

On the main parachute, a Rocketman 1/4” thick stainless steel reefing ring that has a 1.5” inside diameter will be utilized to decrease the shock load of the main parachute deploying at a relatively fast descent velocity. This ensures the parachute remains completely undamaged in order for it to descend the vehicle safely to the ground. Also, deploying the main parachute specifically at 900’ AGL balances the need for the payload system to have enough time to separate from the vehicle and the requirement that the descent time is under 90 seconds.

2.4.5 Current Recovery Design

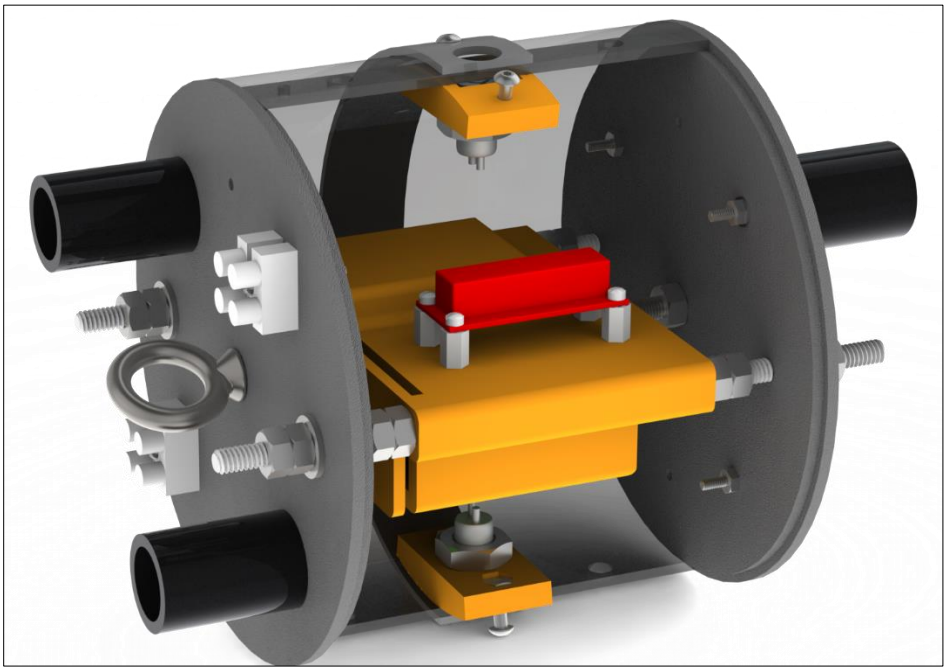

Figure 2.17: Full Scale Avionics Bay Assembly

The current recovery design is comprised of the drogue parachute (24" Fruity Chutes Classic Elliptical parachute), main parachute (144" Rocketman High Performance CD 2.2 parachute), primary altimeter (Altus Metrum TeleMetrum altimeter), redundant altimeter (PerfectFlite StratoLoggerCF altimeter), ejection charges (FFFFG black powder), and key switches. Before launch, the primary and redundant altimeters will be turned on via key switches, and full continuity of both altimeters will be verified. The altimeters will be secured with their batteries on a custom 3D printed altimeter sled within the avionics bay. After launch, the next step in the recovery process begins with the drogue parachute being deployed at apogee using the primary altimeter, which is powered by a 3.7V LiPo battery, and first ejection charge that will engage a canon-like deployment. Then the redundant altimeter, powered by a 9V battery, will initiate a second ejection charge one second after apogee as a backup in case the primary altimeter and ejection charge fail. Next, the main parachute will be deployed at 900' AGL and the redundant altimeter and ejection charge will be initiated at 700' AGL, again, in case the primary altimeter and ejection charge fail to do so. After the parachute deployments, the launch vehicle will descend to the ground. The primary and redundant altimeters will then be collected to conduct post-flight analysis.

As can be seen in figure 2.17, the coupler will be sealed on both sides with fiberglass bulkheads held together with bolted threaded rods. On the exterior of each bulkhead, there will be two black powder canisters (one for the primary charge and one for the redundant charge) that will contain the ejection charges. Terminal blocks also located on the exterior of each bulkhead will be used to facilitate the wiring of the lighters to the black powder. Eyebolts placed in the center of each bulkhead exterior will secure the drogue and main parachutes to the avionics bay. The altimeter sled will slide onto the threaded rods inside the coupler. One side of the altimeter sled will hold the primary altimeter (Altus Metrum TeleMetrum altimeter), powered by a 3.7V LiPo battery, which will be located on the opposite side of the altimeter sled. The redundant altimeter (PerfectFlite StratoLoggerCF altimeter) will be located opposite to the primary altimeter on the altimeter sled, powered by a 9V battery located on the same side as the primary altimeter. Both altimeter batteries will be retained and protected by a 3D printed battery guard. On the interior of the avionics coupler, there will be two key switches secured with 3D printed switch holders, one on each side of the altimeter sled.

3 Vehicle Performance Predictions

The team made use of a wide variety of modeling techniques and software to collect data on and predict the performance of the launch vehicle.

3.1 Launch Day Target Altitude

The team's official launch day target altitude will be 4100 ft. This value was chosen by considering predicted passive apogee values and the predicted performance of the ABCS. Justification and calculations for this value will be found below. OpenRocket simulations were used to primarily determine the apogee of the vehicle, and results were confirmed through custom Simulink software and RASAero. The simulations were conducted using wind speeds of 0-15mph and launch angles between 0-15°. The team also included mass margins to account for any extra mass that might be added to the launch vehicle during its manufacturing and construction phase.

The Project Voss launch vehicle will use the MFSS to support the fins and motor, rather than epoxy. The use of epoxy last year contributed heavily to the mass margin error of the launch vehicle due to its unpredictability, so without it, the team decided to lower the mass margin values when calculating our target apogee. However, this year our launch vehicle uses substantially more machined components not traditionally used in high power rocketry. These components are used in the thrust structure, airbrakes, camera, and payload systems and have weight margins due to the potential for later design changes.

Launch Angle (°)	Chance of Occurring (%)	Wind Speed (mph)	Apogee Values				
			GLOW 54.3lb	GLOW 55.3lb	GLOW 56.3lb	GLOW 57.3lb	Average Across Test Cases (ft)
0	48	0	4667	4537	4473	4410	4522
5	10	5	4495	4378	4305	4245	4356

5	20	10	4350	4219	4155	4083	4202
10	6	5	4237	4103	4029	3998	4092
10	12	10	4087	3897	3848	3858	3923
15	4	20	3280	3104	3060	2986	3108
Mass Average			4186	4040	3978	3930	

Table 3.1: Wind Speed, Mass, Launch Angle Apogee Relationship

Table 3.1 displays the wind speeds and launch angles that were used for simulations in OpenRocket. Each simulation was run 4 times with different mass values to account for any additional mass added during manufacturing. The team will not launch in wind speeds greater than 15 mph.

Launch Angle (°)	Wind Speed (mph)	Altitude Averages for each Launch Event (ft)	Mass Margin Altitude Averages (ft)
0	0	4522	4186
5	5	4356	4040
5	10	4202	3978
10	5	-	3930
10	10	3923	-
15	20	-	-
Total Average		4250	4034

Table 3.2: Average Angle Results

Table 3.2 displays the average apogee calculation across each test case as well as the average for each mass margin. The apogee calculations for the test cases under a 10% chance of occurring were deemed negligible and not used for the expected apogee calculation.

Average of Averages (ft)	4250	4034
Expected Apogee (ft)	4142	

Table 3.3: Final Average Apogee Values

Table 3.3 displays the average of both methods of calculating the expected apogee. The team then took the average of these two values to determine the final expected apogee of the launch vehicle: **4100** ft. The team believes that this value is achievable both through ballasting and the use of the ABCS.

3.2 Current Vehicle Design Performance

3.2.1 Vehicle Stability

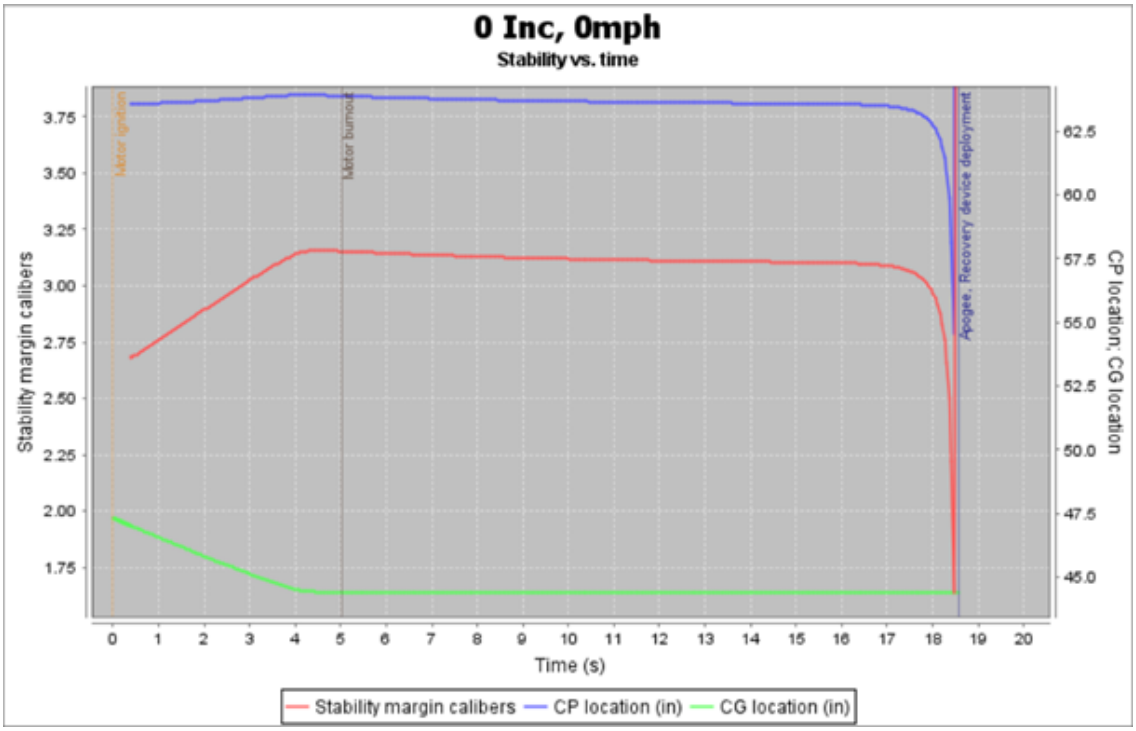

Figure 3.1: Graph of CP location, CG location, and Stability Vs. Time when Windspeed is Zero

After running simulations in OpenRocket, the graph above displays that the launch vehicle design leaves the 144" launch rail with a stability margin of 2.6cal satisfying NASA requirements for launch rail stability. While in flight, the launch vehicle does not experience a noticeable drop in stability. The ABCS system is designed such that it will not significantly affect the stability margin of the vehicle.

The center of pressure is the average location of a pressure field acting on a body. In other words, it is the point where the total sum of all pressures acts on the vehicle. At launch, the center of pressure of the launch vehicle is 63.5634" from the datum of the graph which is considered the tip of its nose cone. Likewise, the center of gravity is the average location of the weight of a body. In other words, it is the point where the weight of the body may be considered to act. At launch, the center of gravity of the launch vehicle is 47.31" aft of the tip for the nose cone which places it 16.24" above the initial center of pressure. As the motor burns out, the center of gravity gradually moves higher at a constant rate to 44.4157" from the datum. This happens due to the linear solid propellant burn rate. The launch vehicle here experiences a total shift of 2.9024".

3.2.2 Vehicle Integrity

Vehicle components have been designed with a minimum factor of safety 2 in mind. The team requires that each component be tested with a Static Study simulation in SolidWorks to verify that expected stresses are at least two times less than the yield strength, to ensure the vehicle's integrity. As an example, the MFSS has gone through many different design iterations and FEA was completed each time. This was to ensure that changes to the design that are done to improve manufacturability and reduce mass do not reduce the factor of safety below the minimum of 2. A brief design review is held each time a design change is implemented so that senior team members who have more experience can ensure that the design integrity is not compromised.

3.3 Flight Simulations

3.3.1 Simulation Software Used

The team used three independent software systems to provide absolute certainty that the design meets or exceeds all mission performance criteria. Using OpenRocket, RASAero, and a custom 2-DOF Simulink, the team has access to a multitude of data sets. These data helped the team make decisions that best support mission performance under a variety of launch conditions and vehicle configurations.

3.3.1.1 **OpenRocket**

The team used OpenRocket as the main simulation software to predict and calculate different scenarios that the vehicle could experience during launch. OpenRocket simulations provided insight on how different parameters such as wind speed and launch angle would affect the vehicle

OpenRocket simulations were used to calculate the maximum altitude that the rocket reached under various conditions. These conditions were changed so that the team could understand how the vehicle would react under various conditions and what to expect if these conditions were encountered during launch day. Insight into vehicle performance under different conditions (best-case and worst-case scenarios) would inform a variety of launch day decisions. The OpenRocket simulation software provides a wide variety of tunable parameters for the vehicle, which the team uses to explore the effect of design modifications.

The team used OpenRocket to calculate apogee values, rail exit velocity, final velocity, and travel time. The apogee values were further analyzed at different parameters so that the team could get a range of values for the maximum altitude. The team then used probability calculations and averages to determine and predict a final apogee value that the rocket would most likely reach. These values can be found in section 3.1.

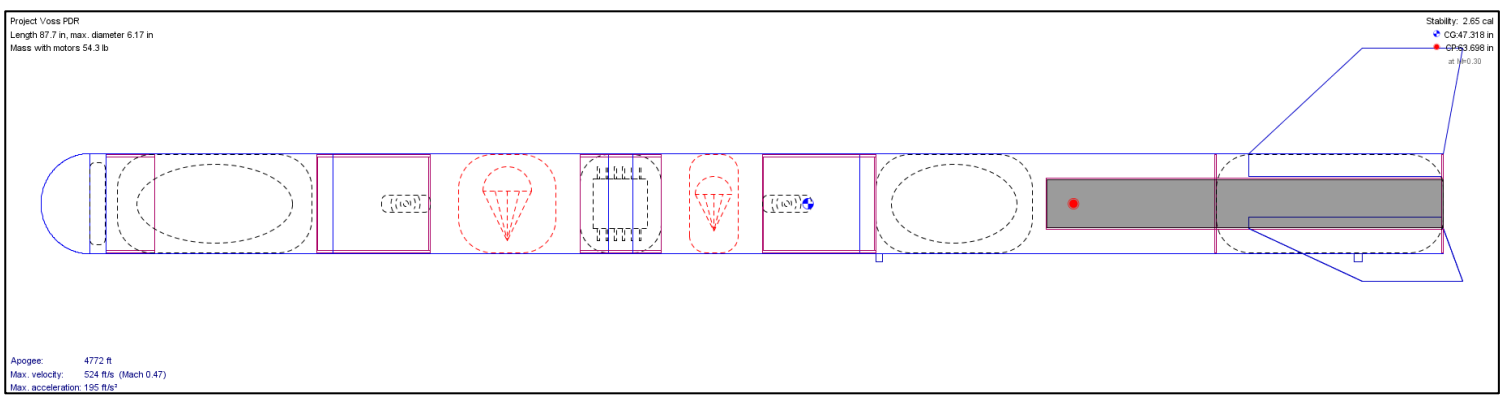

Figure 3.2: OpenRocket Model of the Launch Vehicle

3.3.1.2 **RASAero II**

The team used RASAero II as another source of verification of design. This software was used purely for apogee verification. Similarly, to OpenRocket, RASAero II can simulate various launch conditions and gives the user the ability to change launch angle and wind speed. The data from RASAero II was used to implicitly verify the team's requirements through the verification of OpenRocket results which were able to directly verify the requirements.

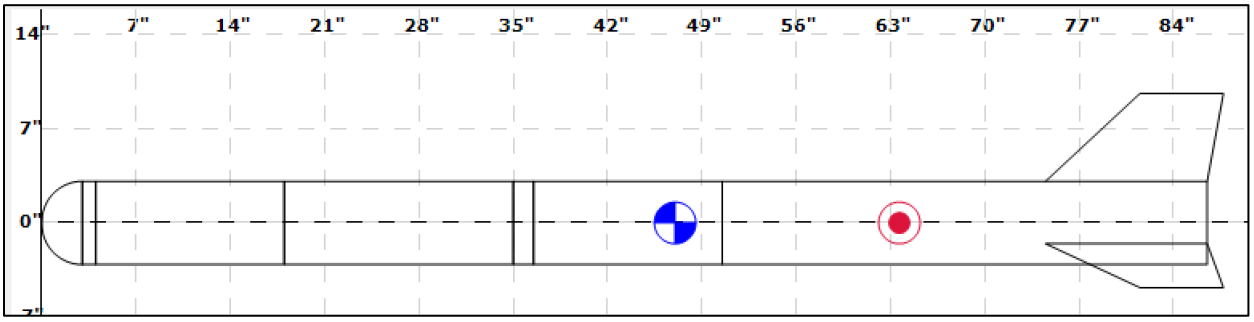

Figure 3.3: RASAero II Model of the Launch Vehicle

3.3.1.3 **Simulink**

The team has also developed a two degrees-of-freedom custom vehicle trajectory simulation in Simulink format to understand how different possible vehicle configurations affect flight and to inform the selection of the new main parachute. Developing a custom simulation parallel to OpenRocket and RASAero offers a greater range of control of different parameters to achieve as much accuracy as possible, acts as verification of the OpenRocket and RASAero simulations, and increases the team's knowledge of and experience with flight dynamics.

The simulation includes a multitude of useful features. Various vehicle and vehicle component characteristics such as mass, size, drag coefficient, and motor thrust, as well as environmental characteristics such as launch rail angle and wind speed, can be input and modified via a MATLAB script. The Simulink model itself utilizes these parameters and established motion equations to simulate the powered ascent, coast, descent under the drogue parachute, and descent under the main parachute phases of flight. Altitude, drift distance, vertical velocity, and horizontal velocity over the flight time are then returned to MATLAB to be plotted and analyzed.

The four critical requirements that this simulation verifies are descent time, drift distance, rail exit velocity, and landing kinetic energy of the heaviest section of the vehicle. These values are calculated from the simulation results and compared to the numerical requirements. Pass/fail results are returned to the user to provide a very quick and simple verification.

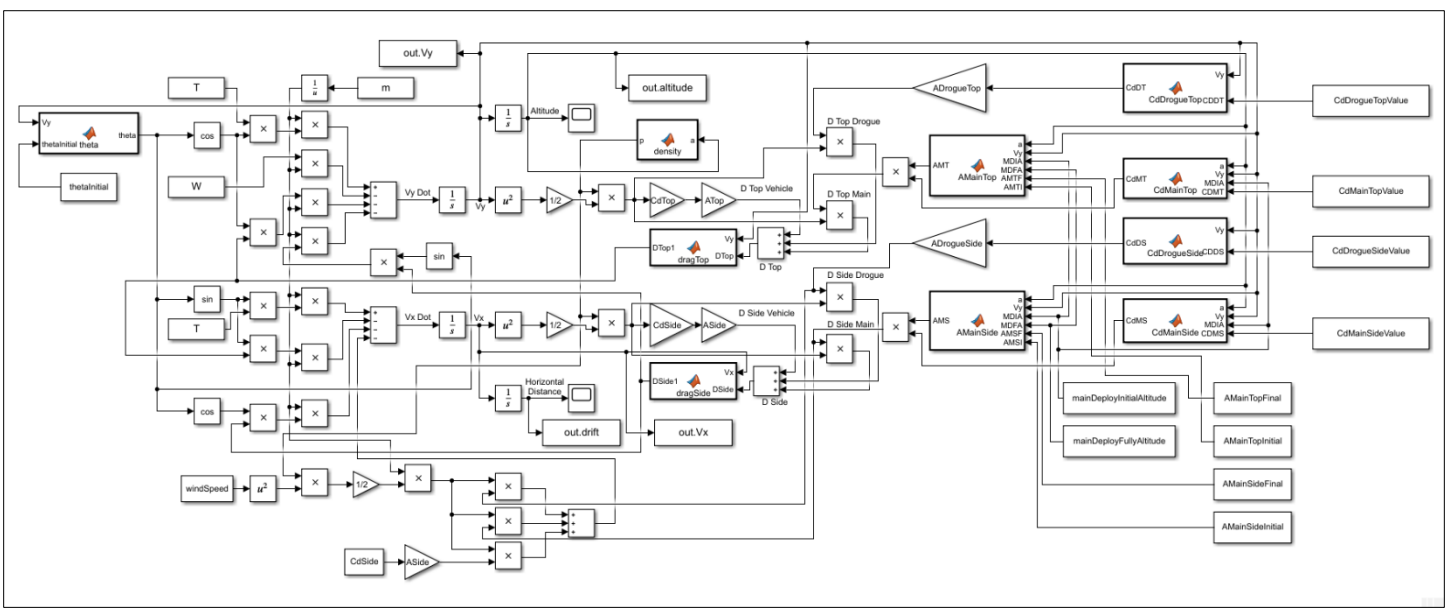

Figure 3.4 Simulink Model

For all of the following Simulink sections, the simulation was run with a launch rail angle inclined at 5° from vertical, the horizontal wind speed set at 5mph, and no additional mass. The vehicle was launched into the wind.

3.3.2 Drift Predictions

3.3.2.1 OpenRocket

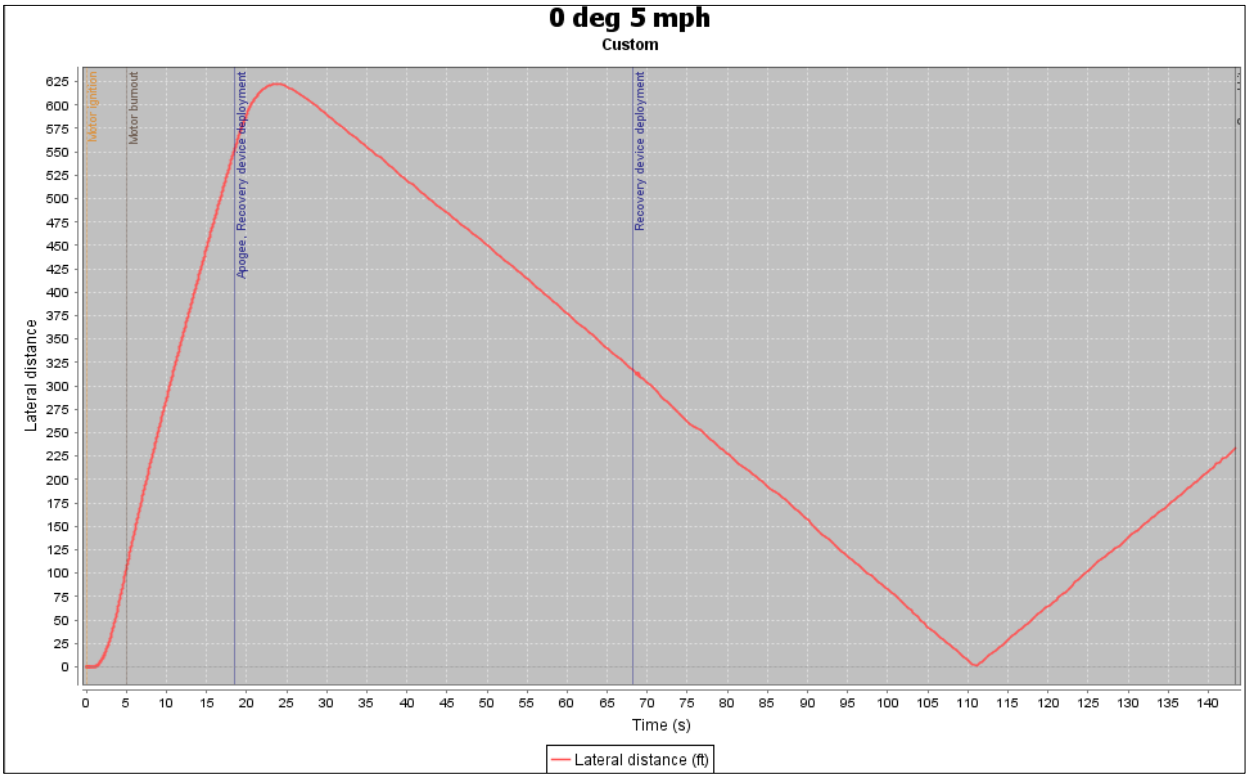

Figure 3.5 Open Rocket: Drift Distance vs Time Plot 0deg, 5mph

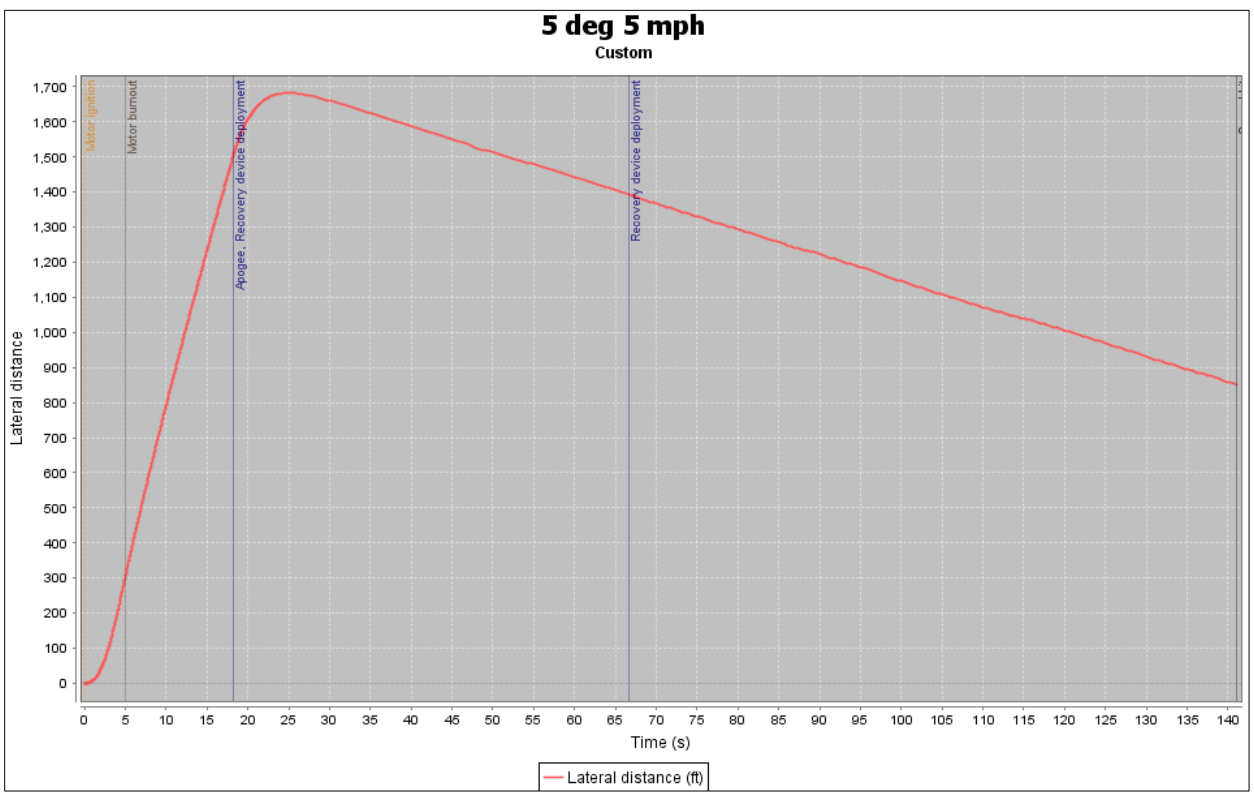

Figure 3.6: Open Rocket: Drift Distance vs Time Plot 5deg, 5mph

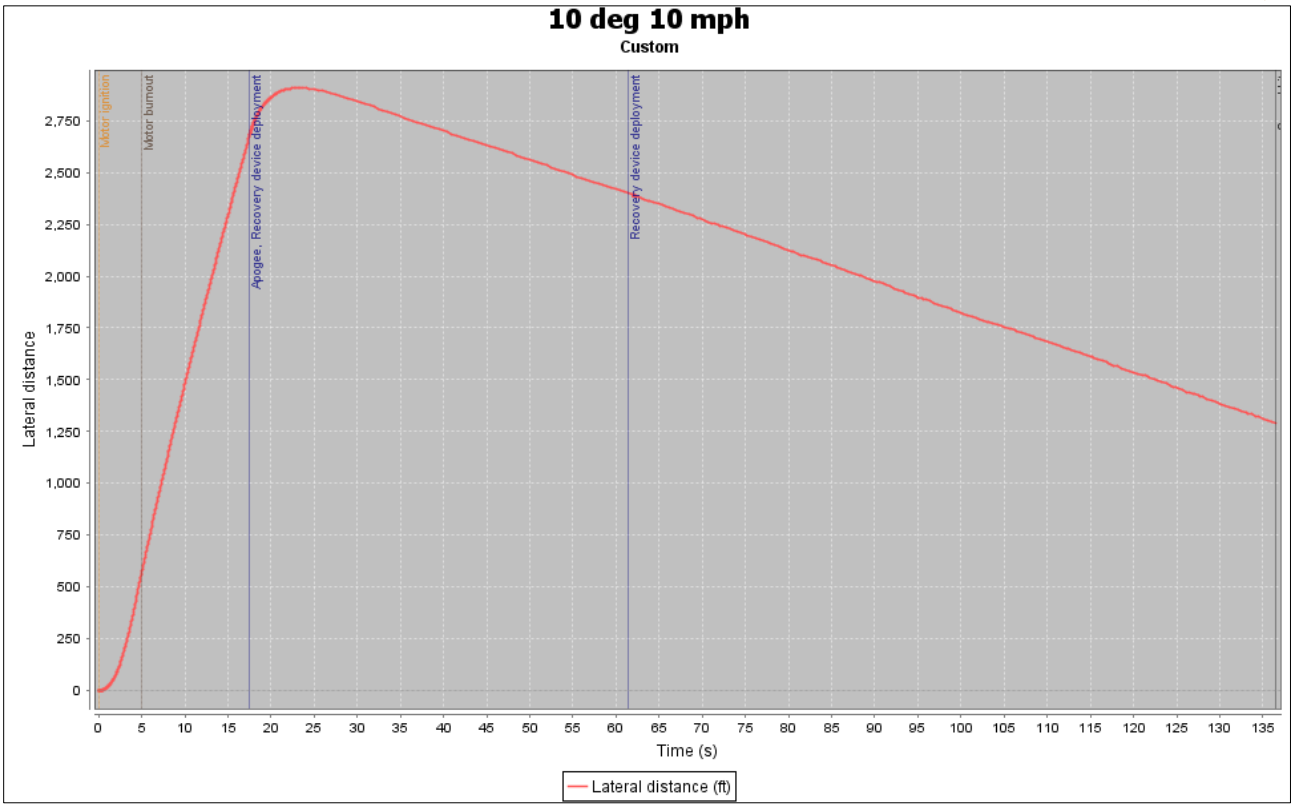

Figure 3.7: Open Rocket Drift Distance vs Time Plot 10deg, 10mph

The most likely launch conditions determined in section 3.1 have wind speed at 8mph and launch angle anywhere from 5-10 degrees. To accommodate these conditions three tests were ran at varying launch angles and wind speeds to best cover the range of launch day conditions. For all tests, the lateral displacement was well below the requirement of 2500', with the worst-case scenario only getting to around 1250' and the best case predicting around 235'. Due to the assumption that the launch vehicle is launched into the wind the drift distance decreases once the motor burns out and the main chute is deployed.

3.3.2.2 Simulink

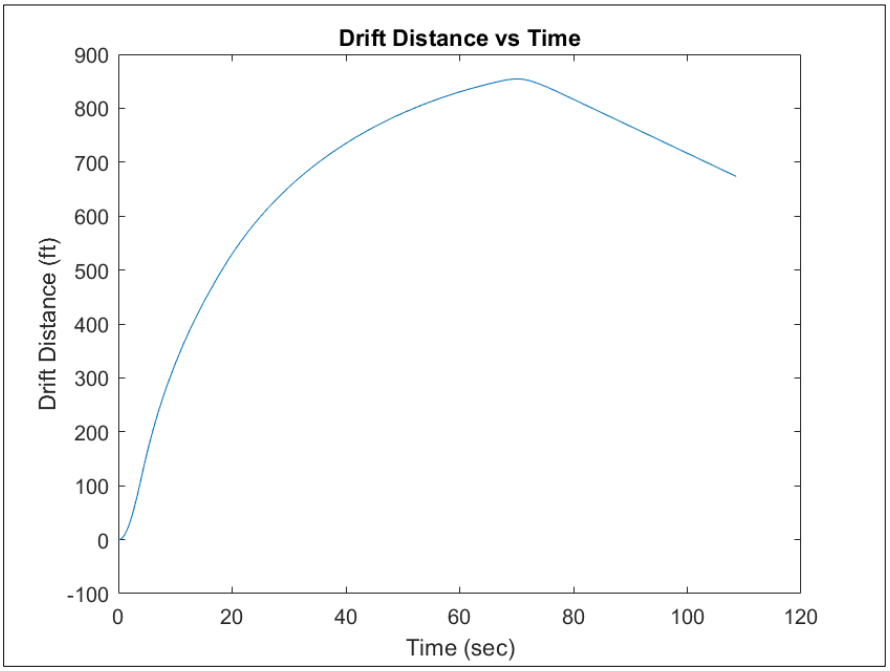

Figure 3.8: Simulink Drift Distance vs Time Plot

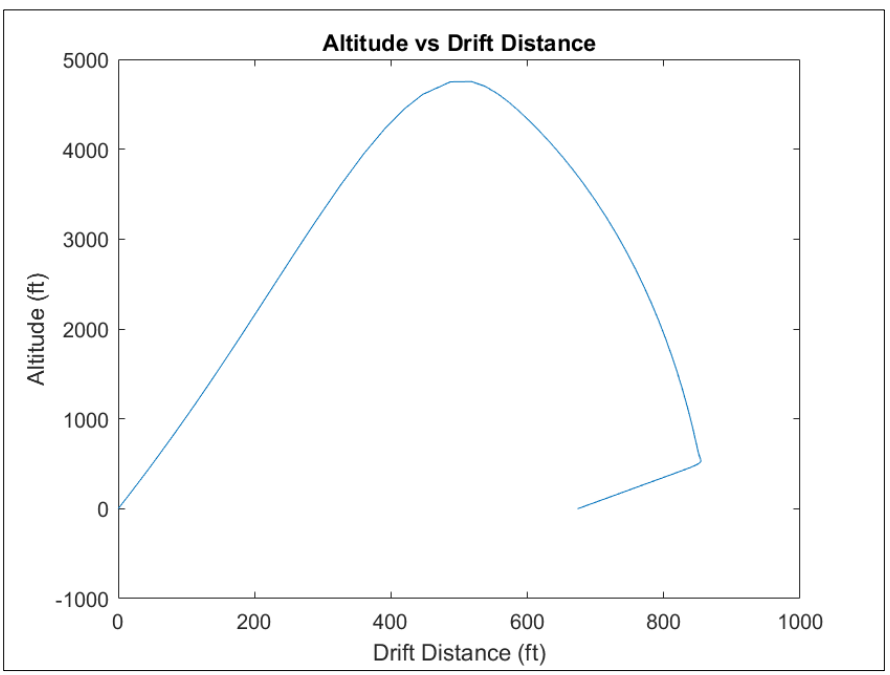

Figure 3.9: Simulink Altitude vs Drift Distance Plot

The Simulink simulation predicts a **674'** drift distance upon landing from the starting location of the vehicle, which is well under the maximum requirement of 2500'. One interesting thing to note is that once the main parachute deploys, the side drag becomes large enough that the wind force causes the vehicle to reverse its horizontal direction, slightly decreasing overall drift. This fact reinforces the team's decision to launch into the wind.

3.3.3 Descent Time Predictions

3.3.3.1 OpenRocket

The following section shows an assortment of altitude vs time plots. Using the data in these plots, the team has determined ensured descent time is less than 90 seconds, satisfying Requirement A.3.1.1.

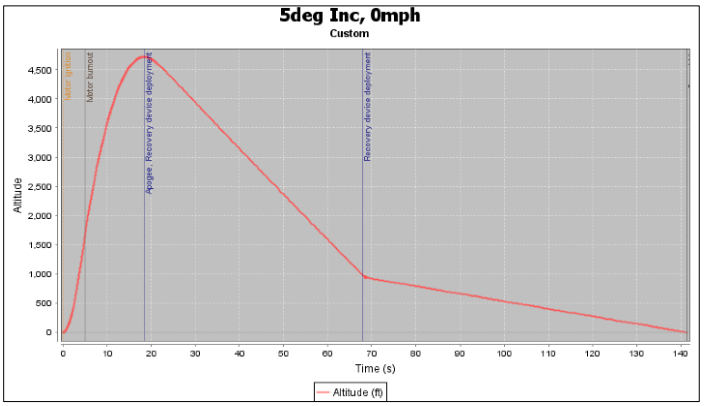

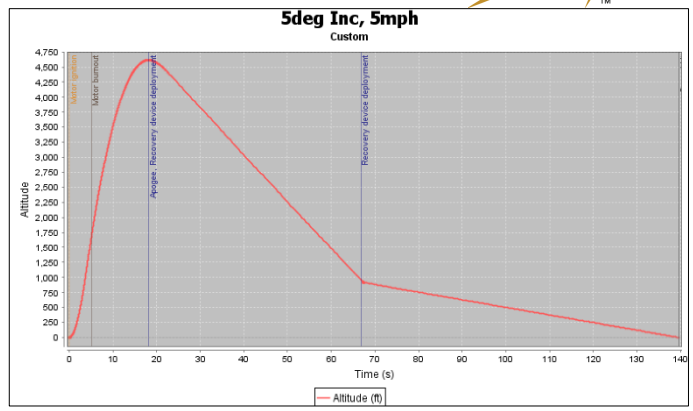

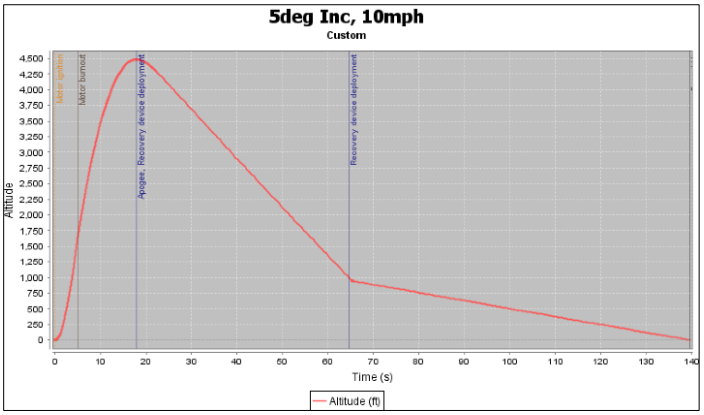

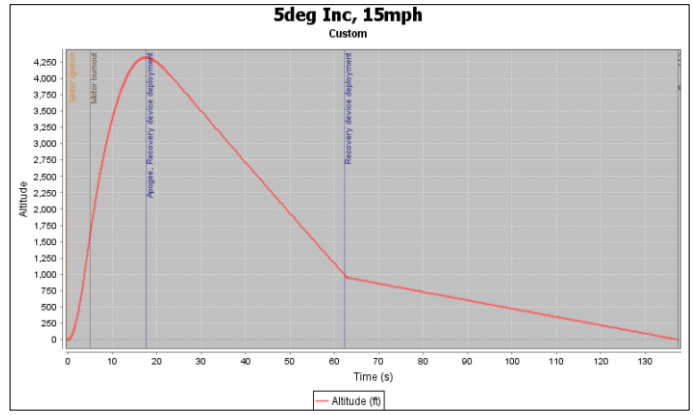

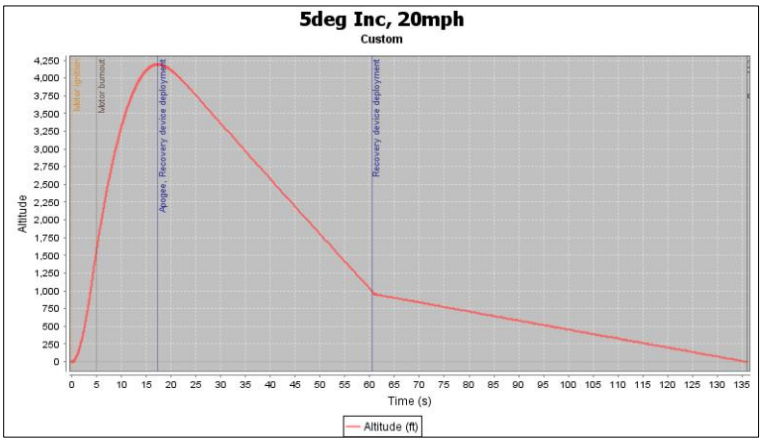

Figures 3.10-3.14: OpenRocket Altitude vs Time Plots

3.3.3.2 Simulink

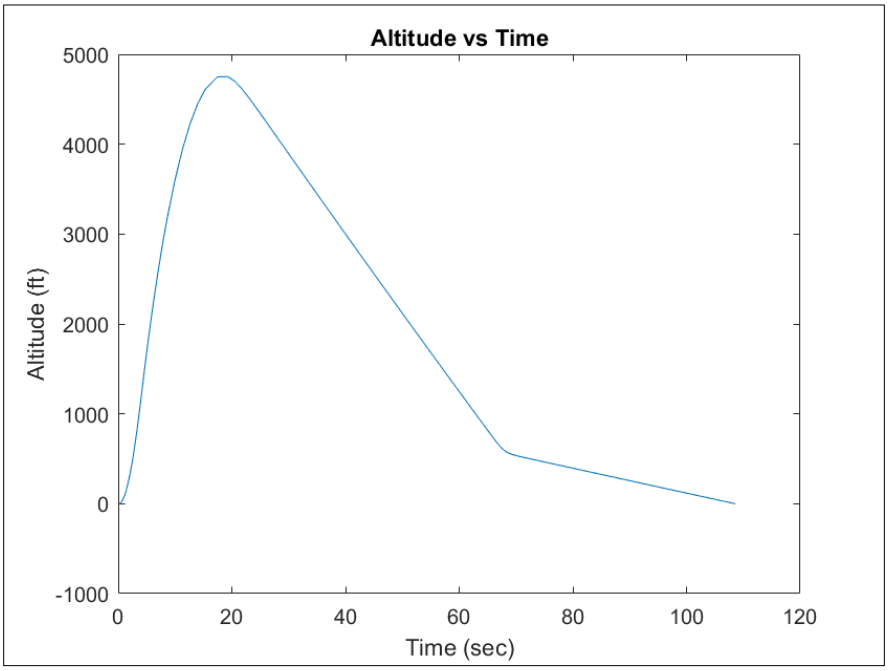

Figure 3.15 Simulink: Altitude vs Time Plot

The Simulink simulation predicts an 89.3s descent time from apogee to landing, which is just under the maximum requirement of 90s. One interesting thing to note is that a few of the parachute parameters were adjusted based on empirical observations from last year. The coefficient of drag of the drogue parachute was increased from the supplier reported value, the coefficient of drag of the main parachute was decreased from the supplier reported value, the main parachute deploys slightly lower than the set altitude, and the main parachute opens a little less than fully.

3.3.4 Landing Energy Predictions

Landing energy predictions from OpenRocket and RASAero II require minor hand calculations since they do not directly calculate the value. To do this, the team obtained the descent velocity, which is directly given in these programs. The team then used the OEW of 49.3lb and calculated the kinetic energy of the rocket using these two values. Since the launch vehicle returns to the ground, the landing energy can be assumed to be all kinetic energy. The landing kinetic energies are high for these simulations because the programs treat the launch vehicle as a single body, so the values calculated are a combination of all individual sections. This meant that the programs were not directly used to verify that landing kinetic energy of the heaviest component was less than 75ft-lbf but instead were used to verify the total value obtained from the Simulink model. From different launch scenarios, the maximum landing energy from OpenRocket and RASAero II were 138.89ft-lbf and 151.51ft-lbf, respectively. These were slightly above the value of 144.6ft-lbf retrieved from the Simulink model, and the team believes that this difference was minimal enough to verify the accuracy of the Simulink model.

Launch Angle (deg)	Wind Speed (mph)	Descent Velocity (ft/s)	Landing Kinetic Energy (ft-lbf)
0	5	13.3	134.81
5	5	13.5	138.89
10	10	13.2	132.788

Table 3.4: OpenRocket: Vehicle Descent Velocities

Launch Angle (deg)	Wind Speed (mph)	Descent Velocity (ft/s)	Landing Kinetic Energy (ft-lbf)
0	5	14.1	151.51
5	5	14.0	149.37
10	10	13.9	147.25

Table 3.5: RASAero II Vehicle Descent Velocities

Descent Under	Descent Velocity (ft/s)
Drogue	89.3
Main	13.8

Table 3.6: Simulink Vehicle Descent Velocities

Vehicle Section	Landing Kinetic Energy (ft-lbf)
Upper Section	40.8
Middle Section	30.5
Lower Section (Dry)	73.3
Total Launch Vehicle (Dry)	144.6

Table 3.7: Simulink Landing Kinetic Energies

The most important value to note from these tables is the landing kinetic energy of the heaviest section of the vehicle (the lower section), which the Simulink simulation predicts to be 73.3ft-lbf. This value (as well as the landing kinetic energies of the other independent sections) is under the maximum requirement of 75ft-lbf.

3.3.5 Prediction Verifications

3.3.5.1 OpenRocket and RASAero II Apogee Verification

The team used two other programs to verify that the Simulink apogee simulation results were reasonable. In the first table are the OpenRocket results for apogee and maximum velocity. Under the perfect conditions of 0° launch angle and 0mph wind speed, the OpenRocket data recorded an apogee of 4780'. This was 28' off of the team's apogee predictions from the Simulink model and contributed to a 0.59% error. This error was nearly negligible, and the team deemed the Simulink model verified.

The next program that the team incorporated was RASAero II, which was used to verify the apogee and maximum velocity results from OpenRocket. Under perfect conditions, the results from RASAero II predicted an apogee of 4959', which was an overestimate of 179' from OpenRocket. The team has historically used RASAero II in the past, and every year it is 100-200' over the estimate from OpenRocket. Since the estimate is under the 200' threshold, the team deems the apogee prediction from OpenRocket verified.

PDR Finalized Design			Simulation Results	
Test	Launch Angle (deg)	Wind Speed (mph)	Apogee (ft)	Max Velocity (ft/s)
1	0	0	4780	524
2	0	5	4756	524
3	0	10	4694	523
4	0	15	4583	522
5	0	20	4421	520
6	5	0	4719	525
7	5	5	4643	525
8	5	10	4536	525
9	5	15	4306	524
10	5	20	4179	523
11	10	0	4539	527

12	10	5	4384	528
13	10	10	4248	528
14	10	15	4030	528
15	10	20	3771	526
16	15	0	4256	531
17	15	5	4063	532
18	15	10	3833	532
19	15	15	3624	532
20	15	20	3441	532

Table 3.8: OpenRocket: Apogee and Maximum Velocity Results

PDR Finalized Design			**Simulation Results**	
Test	Launch Angle (deg)	Wind Speed (mph)	Apogee (ft)	Max Velocity (ft/s)
1	0	0	4959	529
2	0	5	4937	530
3	0	10	4872	531
4	0	15	4762	533
5	0	20	4596	536
6	5	0	4856	531
7	5	5	4799	532
8	5	10	4669	535
9	5	15	4493	538
10	5	20	4288	542
11	10	0	4563	534
12	10	5	4537	536
13	10	10	4356	540
14	10	15	4135	545
15	10	20	3922	550
16	15	0	4126	540
17	15	5	4176	542
18	15	10	3963	547
19	15	15	3708	553
20	15	20	3501	558

Table 3.9: RASAero II: Apogee and Maximum Velocity Results

3.3.5.2 **Simulink Design Review**

Parameter	Value	Pass/Fail
Apogee	4752’	N/A
Ascent Time	19.3s	N/A
Drogue Descent Velocity	89.3s	N/A
Landing Velocity	13.8ft/s	N/A
Descent Time	89.3s	Pass
Drift Distance	674’	Pass
Rail Exit Velocity	64.7ft/s	Pass
Landing Kinetic Energy of the Heaviest Section	73.3ft-lbf	Pass

Table 3.10: Simulink Important Returned Parameter Values

In the table above are some important returned parameter values from the Simulink simulation. These were generated under ideal launch conditions to provide a quick and high-level evaluation of the chosen design parameters. The most significant values to note are the four critical requirements, which are descent time, drift distance, rail exit velocity, and landing kinetic energy of the heaviest section. As can be seen, with the current vehicle design all four critical requirements are passed.

4 Payload Design

4.1 Payload Criteria

4.1.1.1 Mission Statement

4.1.1.1.1 Planetary Landing System

The mission of the Planetary Landing System (PLS) is to capture a level, 360° panoramic photograph of the landing site of the launch vehicle after being safely deployed from the vehicle during main parachute descent. The Lander Subsystem will be actively retained by the Retention and Deployment subsystem (R&D) during flight and after deployment of the vehicle's main parachute. The operation of the PLS will be designed to prevent interference with the launch vehicle after deployment. To ensure the safety of personnel on the ground, the descent design of the Lander must be optimized for reliability.

4.1.1.1.2 AeroBraking Control System

The mission of the AeroBraking Control System (ABCS) is to improve the team's apogee score by increasing the altitude precision and accuracy of the launch vehicle towards the desired altitude. The ABCS will employ an autonomous control system designed to predict the vehicle's current apogee error during coast and adjust the vehicle's drag state to reduce this error. This system will require operation in a high-speed compressible aerodynamic regime, requiring utmost care for mechanical design, material usage, and assurance of stability; the ABCS will be designed with fail-safes to ensure proper deactivation given the possibility of loss of control authority by the vehicle's fins.

4.1.1.2 Mission Success Criteria

4.1.1.2.1 Planetary Landing System

This mission is divided into seven essential phases, each with a defining event leading into the action of the next. The system's mission will be considered complete if its status proceeds to the final phase without failure. In the case of a critical failure, additional contingency plans have been considered. The phases of the PLS mission are shown as follows:

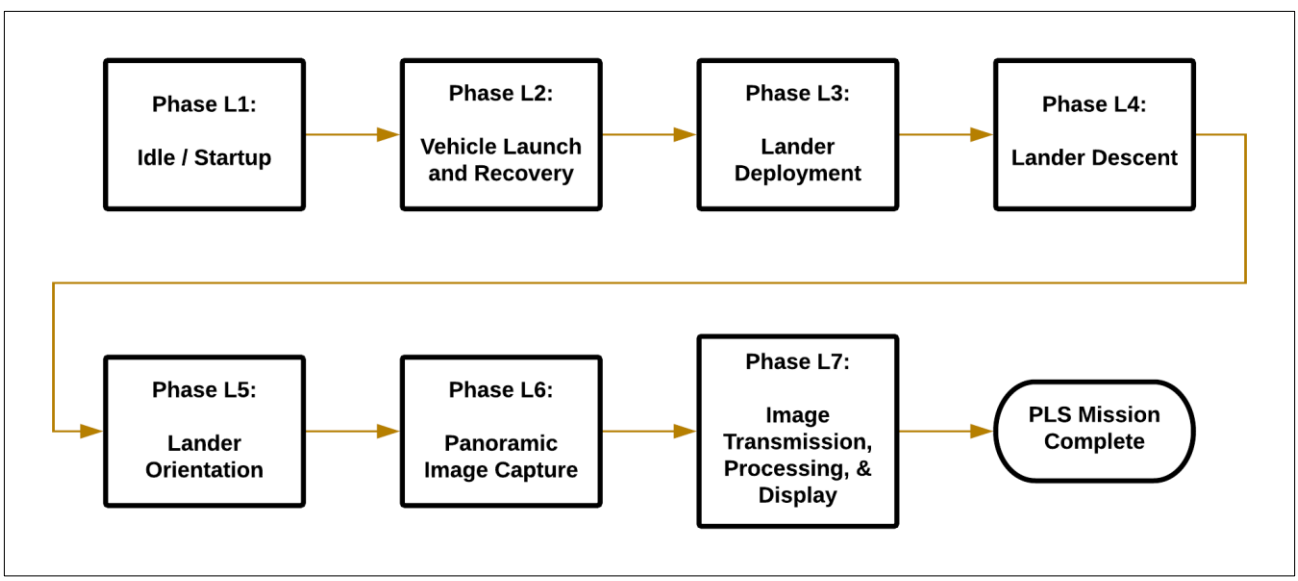

Figure 4.1: Planetary Landing System Mission Overview

L1: Idle / Startup:

The first phase of the mission includes the time between launch vehicle activation and the time of launch. During this time, the R&D will be in an idle but active state in preparation for launch. The Lander will also be in a state of sleep, awaiting instruction from R&D to awaken and activate. Given that the vehicle is ready to launch, the mission may proceed to Phase L2.

L2: Vehicle Launch and Recovery

While the vehicle is in its ascent phase, the R&D will be ensuring that flight loads are transferred around the body of the Lander contained inside. The Lander will not be able to exit the vehicle during this stage due to a mechanical lock which will not unlock without action from the onboard R&D controller. When the vehicle begins its downwards descent, the load state of the R&D will tend to flip, but the system will still be designed to handle the required loads. The R&D will be capable of withstanding jerk from both the drogue parachute and the main parachute before continuing to Phase L3.

L3: Lander Deployment

After the completed deployment of the vehicle's main parachute by approximately 700' AGL, the R&D will begin to deploy the Lander. The R&D will begin to separate the lock vertically constraining the nosecone section of the Payload Bay, allowing the Lander to slide downwards with gravity. Once fully released, the nosecone section will slide downwards before hitting stops, the Lander will then be unconstrained in one lateral dimension, allowing to fall to the side and begin descent. During this time, the Lander's electronic systems will be awoken by the R&D, allowing it to proceed to Phase L4. If the R&D is unable to deploy the Lander for any reason, the Lander will remain sleeping and must be able to be deactivated on the ground with the permission of an RSO. With the Lander having exited the vehicle, the R&D system will remain in an open configuration until touchdown, retaining the nosecone of the vehicle.

L4: Lander Descent

The Lander should be clear of the launch vehicle by 500' AGL, by which time a parachute delay method will have disconnected itself from the Lander, allowing the Lander's parachute to open. It should be noted that even the Lander does not properly awake, the parachute will still deploy, ensuring the safety of the lander and personnel on the ground. The parachute will bring the terminal velocity of the Lander to a speed greater than the speed of the launch vehicle to ensure no interference occurs. The Lander will then reach the ground, landing in any orientation. If the awoken Lander detects a successful return to Earth, it will detach its parachute and begin Phase L5.

L5: Lander Orientation

Now grounded, but with no certainty of landing orientation, the Lander will begin to self-upright through the usage of a motorized Self Orientation Sub-subsystem (SOS). By increasing the Lander's effective support area, the Lander can be assured to slowly bring itself into a stable upright configuration. The SOS will attempt to adjust its final state to ensure that the onboard sensors confirm orientation within 5° of the local gravitational acceleration vector. Once the control system has completed this task, the Lander will proceed to Phase L6. If the Lander is unable to complete this phase after a predetermined amount of time, it will deactivate itself to prevent injury to the ground team.

L6: Panoramic Image Capture

Leveled within the desired tolerance, the Lander should now be clear of debris and should have an elevated view of the launch field. The onboard Panoramic Image Capture Sub-subsystem (PICS) cameras will activate and proceed to capture an image of the field. The image will be stored locally until they are ready to be sent to the team's Ground Control Station (GCS), moving the PLS to the final Phase L7.

L7: Image Transmission, Processing, & Display

Once a communication channel is secured between the GCS and the Lander, the PICS will begin to transfer the image data to the GCS via a radio transmitter. Once received, the GCS will store the image data. The Lander Subsystem has now completed its purpose and may be recovered. The GCS will then proceed to process the received image data and convert it into a viewable format. If the PICS utilizes a multi-image capture system, the GCS will need to stitch them together to view at one time. Once converted, the image will be displayed on the GCS's display screen for confirmation by the team, an RSO, and other NASA personnel. Having produced an image, the PLS has completed its mission and may be shut down for recovery by the ground team.

PLS Mission Completion

By the end of its mission, the PLS will have hopefully produced an unobscured image of the launch vehicle landing site. The system must overcome the challenge of being jettisoned from a high-power rocket during descent and master the elaborate dance of up-righting upon unknown terrain. At the same time, the system must satisfy every functional requirement set forth by the team to be considered ready to fly. If the system can produce these results without succumbing to material failure, inadvertent deployment, or a blocked camera subsystem, then the team will consider the mission a complete success.

4.1.1.2.2 AeroBraking Control System

This mission is divided into five essential phases, each with a defining event leading into the action of the next. The system's mission will be considered complete if its status proceeds to the final phase without failure. In the case of a critical failure, additional contingency plans have been considered. The phases of the PLS mission are shown as follows:

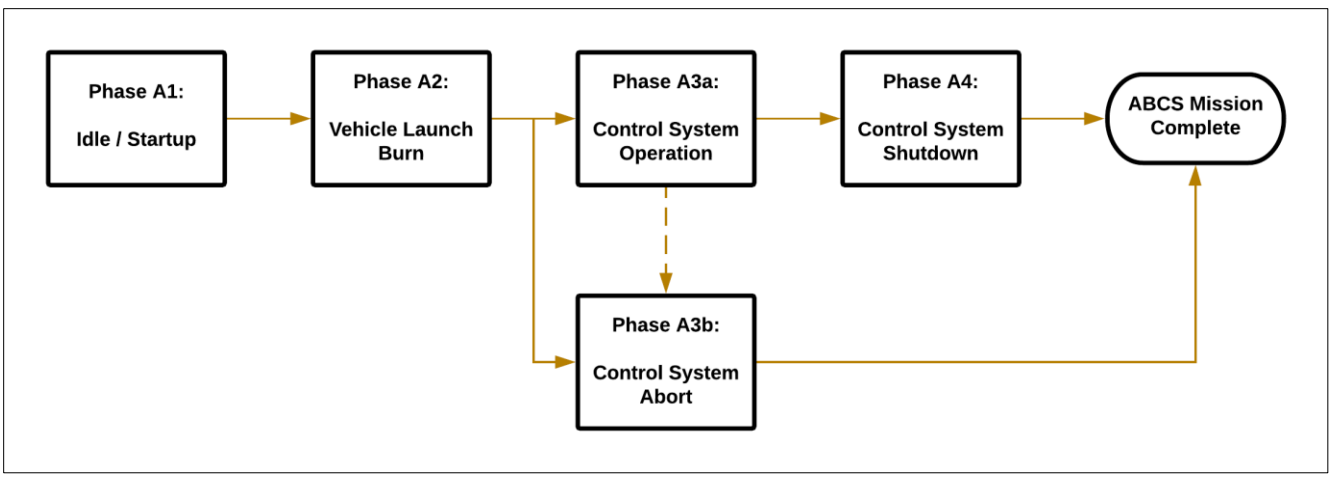

Figure 4.2: AeroBraking Control System Mission Overview

A1: Idle / Startup

The first phase of the mission includes the time between system power-on until the time of launch. During this time, the ABCS is in an idle state waiting for the detection of launch. Once the launch burn is detected by ABCS accelerometers, the ABCS will transition into phase A2.

A2: Vehicle Launch Burn

The ABCS control system will need to detect the acceleration state of the launch vehicle at the start of its burn before it begins its operational stage. The ABCS mechanical system will not be allowed to actuate until the system detects that the launch vehicle's burn has completed, and the vehicle has reached sufficient altitude, confirming a successful burn. With the ABCS remaining inactive during the boost phase, the vehicle's passive stabilizing fins can operate properly without possible loss of control authority. Once the aforementioned criteria are met, the ABCS main drag control system loop may be activated, leading to Phase A3a. If the launch burn is not detected to have completed properly, then the control system will proceed to Phase A3b.

A3a: Control System Operation

Given that the flight conditions are acceptable for the operation of the Airbrakes, the ABCS drag control system loop will begin operation. This control system will employ a suite of sensors for detecting the current state of the vehicle; important inputs include the vehicle's linear and angular velocity, acceleration, air pressure, and altitude. A constant set by the team will be the desired final apogee of the launch vehicle. The control system will first predict the current apogee error of the vehicle relative to the desired apogee and then will determine how much drag would currently be required to achieve this final apogee. The ABCS will accordingly actuate its Airbrakes, producing this additional drag. An important initial condition of this phase is that the launch vehicle will, without intervention, achieve a final apogee greater than the desired altitude; without this condition, the ABCS would be unequipped to provide any additional required velocity—it can only act to remove mechanical energy from the system. If at any time during the active phase the control system detects that the launch vehicle has exceeded attitude state or acceleration bounds determined by the team to be within an acceptable range, the control system will immediately switch to Phase A3b to avoid possible loss of stability. If the ABCS continues operation up until apogee, it will transition to Phase A4.

A3b: Control System Abort

The ABCS will be designed to cease its functionality if it detects that it could potentially cause instability of the launch vehicle during ascent. If the ABCS reaches Phase A3b at any time from the beginning to the end of its designated operation time, it will follow a shutdown sequence to ensure that the system does not incur additional change in attitude or velocity. This shutdown sequence will involve immediately ending the apogee optimization drag control system loop and completely retracting the Airbrakes Subsystem's drag plates. This contingency plan is essential to allow the launch vehicle's stabilizing fins to return the attitude of the vehicle to an acceptable state, avoiding an induced tumble. With all external surfaces now inactive, the ABCS control system will remain inactive for the remainder of descent and touchdown. While the control system was unable to fully optimize and complete its final calculations and adjustments, the team will still consider this contingency plan as successful as the overall vehicle will still complete its mission.

A4: Control System Shutdown

When the vehicle reaches apogee according to flight sensors, the ABCS will begin a deactivation sequence to reduce the possibility of damage to components. This deactivation sequence will involve immediately ending the apogee optimization drag control system loop and completely retracting the Airbrakes Subsystem's drag plates. With all external surfaces now inactive, the ABCS control system's mission will be considered complete and will deactivate for the remainder of descent and touchdown.

ABCS Mission Completion

By the end of its mission, the ABCS will have hopefully reduced the error between the vehicle's actual apogee and the desired apogee relative to previous years' vehicles. The system must overcome the challenge of compressible regime aerodynamic loads while also deftly making complex trajectory calculations and executing upon them. At the same time, the system must satisfy every functional requirement set forth by the team to be considered ready to fly. If the system can produce these results without succumbing to material failure, having an uncontrolled deployment, or inducing a hazardous vehicle tumble, then the team will consider the mission a complete success.

4.1.1.3 Design Selection Process

In order to produce systems capable of satisfying all requirements of the mission, the Payload team has developed a sophisticated, yet straightforward and versatile method of developing and validating potential designs. This process begins with the complete breakdown of technical requirements set by NASA and PSP-SL into Subteam Requirements, in accordance with PSP-SL's new Requirements and Verification Plans (R&VP) standard. Afterward, the team proceeds to generate design concepts and judge their ability to satisfy these requirements. This is followed by a complete assessment of all team-validated design alternatives, judging each with respect to each other through a hierarchy of merit. These latter stages are what is referred to as Trade Studies and are completed for each design decision which the team

together assesses as necessary to describe the preliminary design process. Each executed Trade Study is subsequently accompanied by a table describing this decision-making process; this form of table is referred to as a Decision Matrix, and many of these can be found in the following sections. By assessing each essential design decision with respect to its alternatives, the team can increase its confidence in its current design approach. Below is a diagram illustrating this design selection process amongst the three best alternatives for a single design decision.

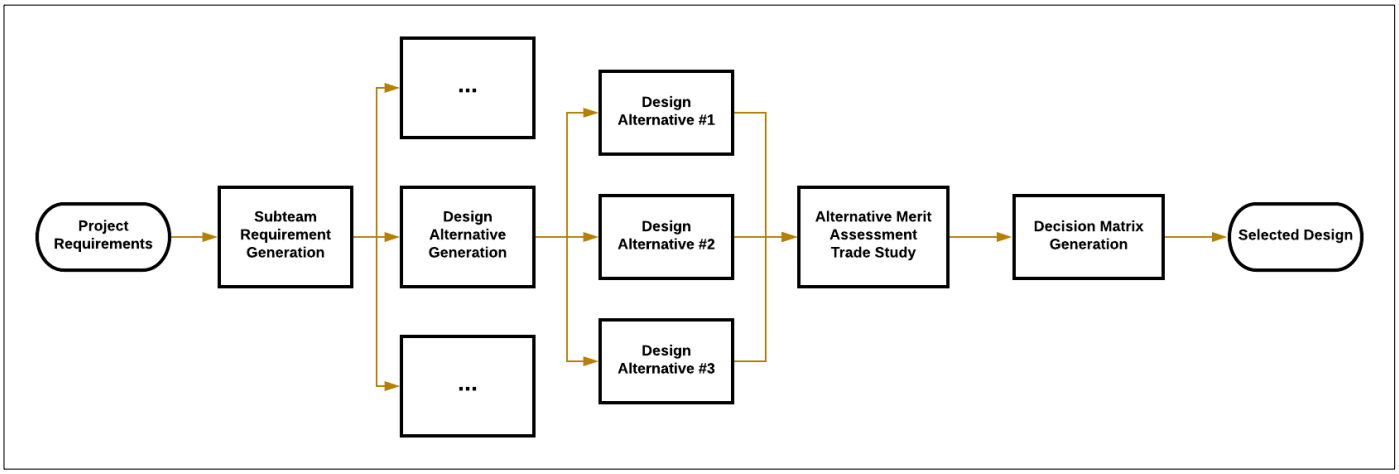

Figure 4.3: Single-Decision Design Selection Process

This design selection process has been designed to be infinitely repeatable for any decision which the team deems worthy of further inspection; this becomes common practice as members assess their implicit conceptual assumptions. This method forces members to take their selected designs and be able to fully describe why exactly they were chosen over their near neighbors. By applying this method, the team can ensure that more than one design alternative has been considered and the reasons for abandoning a particular approach can be explained. As a result, the designs selected by the team should be the best available with the provided information. If the team decides to revise or revisit a design decision, it may do so without needing to restart the alternative generation process. In future years, these decision matrices can be reviewed and updated to reflect more closely the expectations of each design decision's performance.

4.2 Planetary Landing System

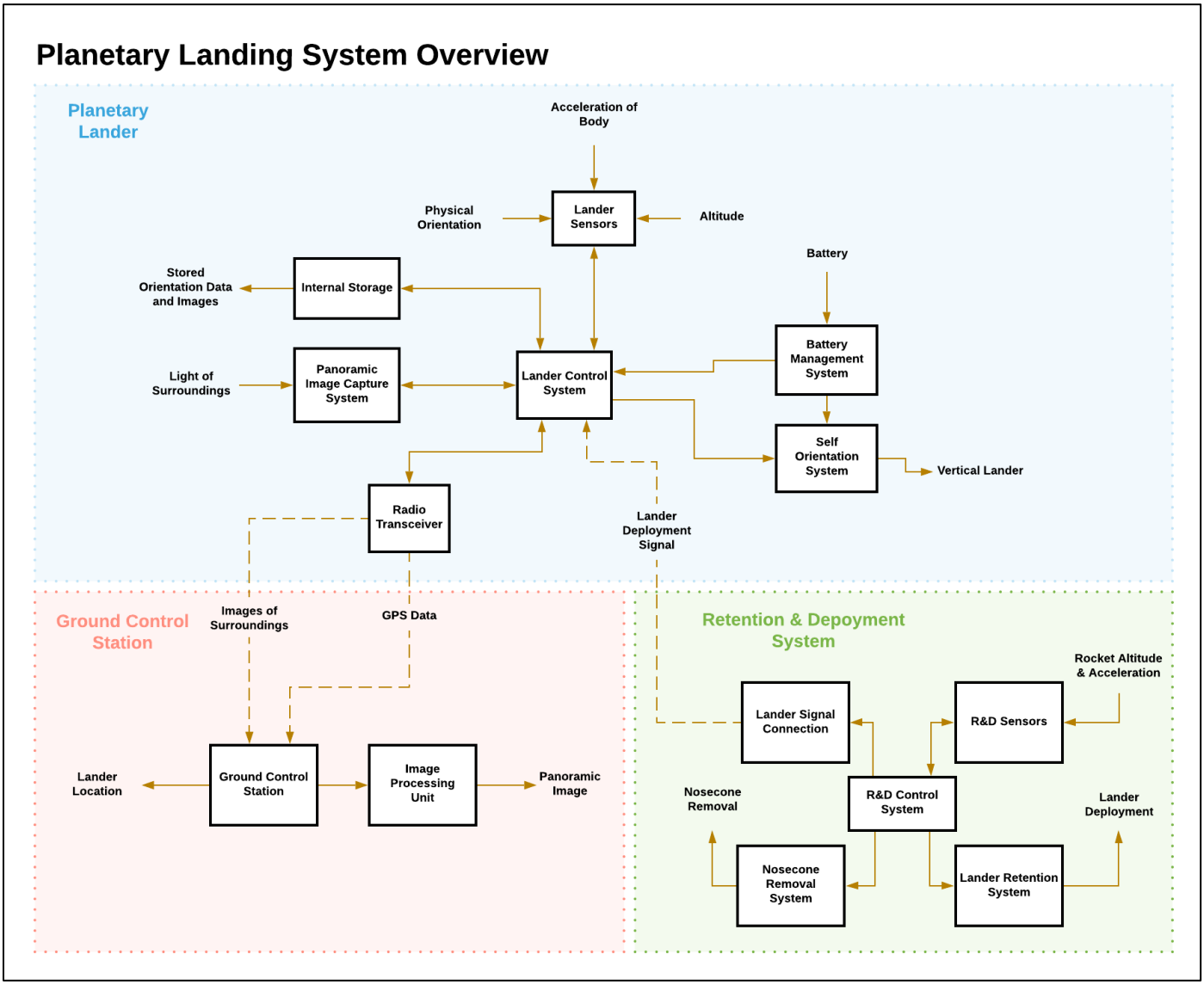

Figure 4.4: Planetary Landing System FBD

4.2.1 Overview

The Planetary Landing System (PLS) includes the Lander Subsystem (Lander) and its associated Retention and Deployment Subsystem (R&D). The Lander Subsystem will include the Self Orientation Subsystem (SOS), the Panoramic Image Capture Subsystem (PICS), and the Lander Control Subsystem (LCS). Lander Subsystem will be ejected from the launch vehicle. Once the launch vehicle has deployed the main parachute and its altitude has dropped below 1000' AGL, the R&D system will release the Lander out the front of the launch vehicle. The Lander will then deploy its own parachute after falling a sufficient distance from the launch vehicle. The Lander will strike the ground at a sufficiently low speed deemed by the design team to be acceptable for the continued operation of the Lander's subsystems. Once the Lander detects that it has stopped moving, the SOS will begin to orient the Lander within 5 degrees of vertical. Once the SOS has completed self-orientation, the PICS will take a photograph of the surrounding area from each of its 3 static cameras. The photos will then be stored in digital storage located in the Lander to await radio transfer to the GCS. Once a stable connection has been established, the photos will be transferred to the GCS. An image processing unit in the GCS will then combine all three images into one panoramic image. The full panoramic image will then be displayed on screen for inspection.

4.2.2 Design Level PLS Subsystem Alternatives

4.2.2.1 Retention and Deployment Subsystem

4.2.2.1.1 Ejection Method Selection

The R&D faces the all-new challenge of retention and deployment during descent—not something PSP-SL has ever attempted in the past. In this unusual terrain—or lack thereof—the typical rules of static forces and loading are complicated by a lack of a solid sink of momentum and energy—otherwise just being the Earth itself. Therefore, the designs discussed herein focus on utilizing the unique orientation and force state of the launch vehicle as it ascends under power and descends under drag forces. The final design of the R&D must be able to transfer all associated loads of flight while maintaining the ability to quickly and reliably deploy the Lander in a manner that can be tested on or near the Earth's surface.

Due to complications arising from Requirement V2.5, as outlined in this report's *Changes Made Since Proposal* section, the team pursued designs that would no longer involve the "tethered" detachment of the launch vehicle's nosecone but instead considered alternatives that could still mechanically retain this expensive and important section of the vehicle. This philosophy led the design generation process to consider the inherent advantages of the Payload Bay's location as well as its complicating factors. Primarily, the team found that the positioning of the Payload Bay during descent was optimal for considering a gravity-assisted deployment strategy. However, designs would have to consider both the existence of the aforementioned nosecone as well as the limitations of space and access if a gravity-oriented design were to work; while the nosecone could be made to remain mechanically attached to the launch vehicle at all times, there remained the question of how these mechanisms could fit in the small space allotted for the vehicle's lander to be able to deploy.

The team ultimately considered four possible methods of deploying the Lander including the Rotation Method, the Integrated Land-Nose, the Propulsive "Pizza Table," and the Gravity "Pizza Table." The Rotation Method proposed having the nosecone rotate about an axis parallel to the vehicle's and out of the way of the Lander, allowing it to fall free. Both hinge and swivel configurations were discussed but ultimately rejected for complexity, increased time to deployment, and most importantly the concern that the servos and mechanisms required would take up too much space in the front of the payload bay, greatly decreasing the maximum possible diameter of the Lander. The Integrated Land-Nose proposed combining the nosecone and Lander into a single unit to avoid some issues outright, namely the concern of the deployed Lander colliding with a detached nosecone. However, this idea was ultimately rejected because it constrained the design of the Lander too much; the nosecone's size and length would cause instability for the Lander, and its weight would be detrimental to the descent process. The Propulsive "Pizza Table" method suggested having the Lander fixed in the bay, protected by a frame known as the Pizza Table. Inspired by a pizza saver—a plastic device often found within pizza boxes to protect pizza from getting crushed—the Pizza Table's legs wrap around the Lander and terminate at the vehicle's nosecone. In this first case, the legs of the Pizza Table would not be connected to the nosecone. Instead, the legs of the Pizza Table rested on the nose cone which would be secured with shear pins to the fuselage of the rocket. To deploy, black powder charges would detonate behind the Pizza Table. The force would travel through the table's legs and break the shear pins ejecting the nosecone and additionally driving the Lander and Pizza Table out of the bay. This solution was rejected due to the danger it posed to the Lander and the Payload Bay fuselage and the team's distrust of the testability and reliability of black powder charges. Additionally, it complicated the team's desire to mechanically retain elements of the launch vehicle.

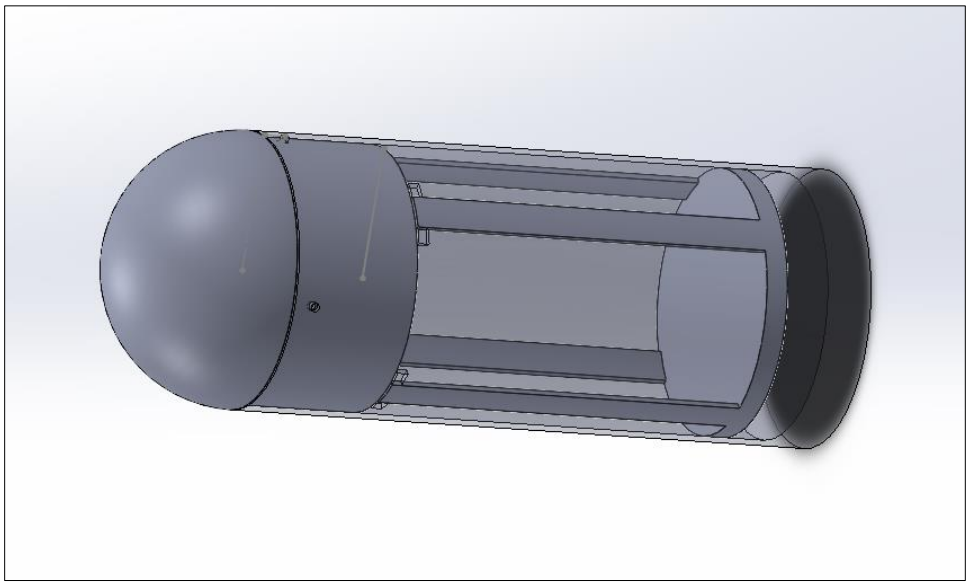

Figure 4.4 Propulsive Pizza Table during flight.

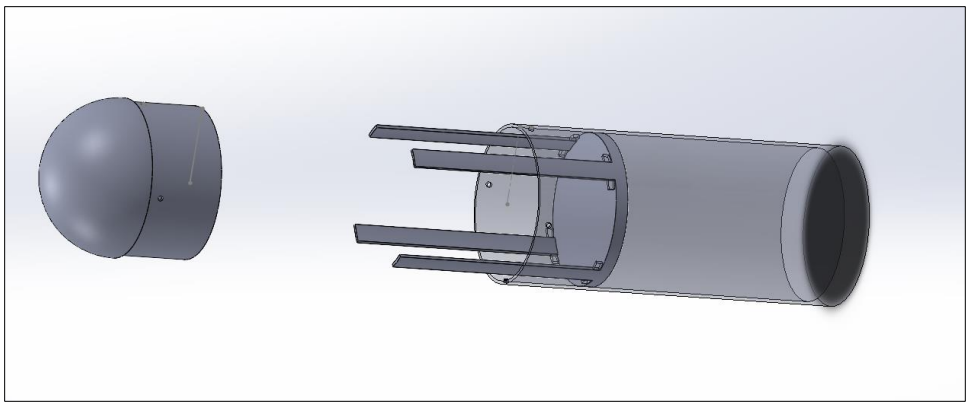

Figure 4.5 Propulsive Pizza Table after deployment.

The final proposed solution, the Gravity "Pizza Table," is very similar to the Propulsive "Pizza Table" except the legs of its Pizza Table are directly connected to the nosecone. Rather than securing the nosecone using shear pins, it is instead held in place through the Pizza Table by a locking mechanism at the rear of the Payload Bay. Also, rather than having the Pizza Table and Lander deployed by the force of a gunpowder charge it harnesses the force of gravity present during the descent phase. This solution was very attractive to the team because it eliminated many of the issues of the Propulsive "Pizza Table;" the nosecone remains affixed to the Pizza Table and thus reduces the risk of the Lander colliding with the nosecone during deployment. Also, by avoiding the use of explosives in the deployment process, the system poses far less risk to the Lander and the fuselage of the vehicle. It was also attractive in comparison to the Rotation Method due to lower mechanical complexity. Meanwhile, this design was chosen over the Integrated Land-Nose because it did not limit the design of the Lander.

DECISION CRITERIA		RETENTION AND DEPLOYMENT CONFIGURATION OPTIONS											
		Gravity(PP) Method			Rotation Method			Integrated Landnose			Propulsive (PP) Solution		
Subteam Requirements:		Predicted Status:		Cleared?	Predicted Status:		Cleared?	Predicted Status:		Cleared?	Predicted Status:		Cleared?
S.P.0.2 - mass < 5lbm		Very likely		Y	Very likely		Y	Very likely		Y	Very likely		Y
S.P.1.2 - once deployed keep 6" away		Very likely		Y	Very likely		Y	Very likely		Y	Very likely		Y
S.P.1.6 - deploy within 700' to 500'		likely		Y	Very likely		Y	Very likely		Y	Very likely		Y
S.P.1.18 - secure payload during flight		Very likely		Y	likely		Y	likely		Y	likely		Y
S.P.1.19 - protect payload during flight		Very likely		Y	likely		Y	likely		Y	likely		Y
Payload Wants:	Weight:	Info:	Value:	Score:	Info:	Value:	Score:	Info:	Value:	Score:	Info:	Value:	Score:
Speed of deployment	0.2	Med	0.5	0.1	Low	0.25	0.05	High	1	0.2	High	1	0.2
Space in bay taken up	0.1	Med	0.5	0.05	High	0.25	0.025	Low	1	0.1	Med	0.5	0.05
Price	0.1	Med	0.5	0.05	Med	0.5	0.05	Med	0.5	0.05	Med	0.5	0.05
Deployment reliability	0.3	Med	0.5	0.15	High	1	0.3	Low	0.25	0.075	Med	0.5	0.15
Payload Protection	0.1	Med	0.5	0.05	Med	0.5	0.05	Med	0.5	0.05	Low	0.25	0.025
Complexity	0.2	Low	1	0.2	High	0.25	0.05	High	0.25	0.05	Med	0.5	0.1
Total Merit:		0.6			0.525			0.525			0.575		
SELECTED CONFIGURATION:		X			_			_			_		

Fig 4.4 R&D Trade Study

4.2.2.1.2 Control System Selection

4.2.2.1.2.1 *Microcontroller Selection*

The team considered a few microcontrollers for the R&D system. Among other features, the selected microcontroller needed to have a built-in wired communication protocol. This way, the microcontroller could be easily configured to communicate with its peripherals. Additionally, the microcontroller needed to have a low power consumption. With this property, the R&D system would not need a large battery and could be more compact.

A few microcontroller boards were chosen to compare. The Raspberry Pi Zero was eliminated quickly due to its large power consumption and a lack of overly complex computations. Next, the Arduino Teensy 4.0 was considered. Again, its power consumption was high and was not the best option. Finally, the two that remained were the Arduino Pro Mini and the Arduino Nano. Both have the same microcontroller chip, but there are a few differences on the boards. Due to extra unnecessary components and a larger profile, the Nano was eliminated.

Regardless of the board that was selected, the top two choices both utilized the ATmega328. This solidified it as the chosen microcontroller. For the actual board itself, the Pro Mini is the leading choice. However, since this board is a retired product, the Nano is being considered as a backup. The team selected the Pro Mini due to its low power consumption, small form factor, and ease of use. Additionally, both boards have SPI and I2C communication protocols, which gives the team the freedom to consider components for the R&D system that use either protocol.

DECISION CRITERIA		R&D MICROCONTROLLER OPTIONS											
		Arduino Pro Mini (3.3V)			Arduino Teensy 4.0			Arduino Nano			Raspberry Pi Zero		
Subteam Requirements:		Predicted Status:		Cleared?	Predicted Status:		Cleared?	Predicted Status:		Cleared?	Predicted Status:		Cleared?
S.P.1.4 - Able to Interface with R&D System		Yes		Yes	Yes		Yes	Yes		Yes	Yes		Yes
Wants:	Weight:	Info:	Value:	Score:	Info:	Value:	Score:	Info:	Value:	Score:	Info:	Value:	Score:
Power Consumption (W)	0.4	0.05	1	0.4	0.33	0.15	0.06	0.095	0.53	0.212	0.4	0.13	0.052
Digital I/O Pins	0.1	14	0.35	0.035	40	1	0.1	22	0.55	0.055	40	1	0.035
Size (mm^2)	0.3	594	1	0.3	632	0.94	0.282	810	0.73	0.219	1950	0.3	0.09
Price	0.2	$3.67	1	0.2	$23	0.16	0.032	$4	0.9175	0.1835	$5.00	0.734	0.1468
Total Merit:		0.935			0.474			0.6695			0.3238		
SELECTED CONFIGURATION:		X			_			_			_		

Figure 4.44.5: R&D Microcontroller Trade Study

4.2.2.1.2.2 *Release Timing Method Selection*

The team is considering a few options for timing the release of the Lander. One option would use an altimeter to trigger the release at a specific altitude. Another option would be to use an accelerometer to determine when the main parachute has been deployed. The microcontroller could then deploy immediately after main deployment or delay for a specific period of time before deploying. The team is leaning towards a mixed solution; the altimeter would be used to release when a specified altitude condition is satisfied, while the accelerometer would be used to confirm that the main parachute has been deployed. In the event of vehicle avionics failure, this would allow for the R&D system to delay the release until after the backup avionics system has deployed the main parachute.

With that design in mind, the team tentatively selected an altimeter and accelerometer. The LSM6DS33 IMU was selected due to the team's previous experience with this sensor. The BMP280 was selected for the altimeter because of its accuracy relative to other options of the same cost. The main concern with the altimeter is its accuracy; it must be able to provide accurate enough information such that the microcontroller can time the necessary functions appropriately. In addition, the team was concerned with the available communication configurations. The BMP280 had options that set it apart from prior models.

DECISION CRITERIA		ALTIMETER CONFIGURATION OPTIONS								
		BMP180			BMP280			MEAS MS5840		
Subteam Requirements:		Predicted Status:		Cleared?	Predicted Status:		Cleared?	Predicted Status:		Cleared?
S.P.1.6 -> Operate above a certain altituide		Above 500'		Y	Above 500'		Y	Above 500'		Y
S.P.2.3 -> Achieve a certain accuracy		Accurate to within 50'		Y	Accurate to within 50'		Y	Accurate to within 50'		Y
Payload Wants:	Weight:	Info:	Value:	Score:	Info:	Value:	Score:	Info:	Value:	Score:
Accuracy (hPa)	0.4	0.1	1.00	0.40	0.1	1.00	0.40	0.5	0.2	0.08
Price	0.3	$3	1.00	0.30	$3	1.00	0.30	$8	0.38	0.11
Communication Interfaces	0.3	Med	0.5	0.15	High	1	0.3	Med	0.5	0.15
Total Merit:		0.85			1			0.3425		
SELECTED CONFIGURATION:		_			X			_		

Figure 4.6: Altimeter trade Study

4.2.2.2 Descent and Landing

4.2.2.2.1 Parachute Selection

Once deployed, the Lander faces a new number of challenges. Following Subteam Requirements S.P.1.1 and S.P.1.2, the team decided the Lander would best land with a "tried and true" parachute. The team decided to weigh different parachutes based on their descent rate, price, and packing volume. Of these, the team felt that the descent rate was the most important factor in selecting a parachute. This was decided because the team has a projected range for descent rate already—a result of the above Requirements. A parachute with a slower descent rate at a given size could be custom ordered such that it has a higher descent rate, lowering the cost and packing volume. The cost and packing volume were considered because the team has limited space and funding for the rocket. The team chose to use the Rocketman High Performance Parachute to keep the Lander's descent rate at around 20m/s. This was chosen by comparing it to similar candidates and determining that for a given Lander weight and parachute diameter, the Rocketman had a significantly lower packing volume and descent rate.

DECISION CRITERIA		PARACHUTE CONFIGURATION OPTIONS								
		Rocketman Pro Experimental			Rocketman High Performance			Fruity Chutes High Performance		
Subteam Requirements:		Predicted Status:		Cleared?	Predicted Status:		Cleared?	Predicted Status:		Cleared?
S.P.1.2 – Lander > 6ft from rocket parts		Falls faster than rocket		Y	Falls faster than rocket		Y	Falls faster than rocket		Y
S.P.1.1 – Lander must land safely		Slows Speed to 25fps		Y	Slows Speed to 15 fps		Y	Slows Speed to 15 fps		Y
Payload Wants:	Weight:	Info:	Value:	Score:	Info:	Value:	Score:	Info:	Value:	Score:
Packing Volume	0.25	42.45in^3	0.565371025	0.141342756	24in^3	1	0.25	27.7in^3	0.866425993	0.216606498
Descent Rate	0.5	25fps	0.6	0.3	15fps	1	0.5	15fps	1	0.5
Price	0.25	$48.50	1	0.25	$100.50	0.482587065	0.120646766	$134.78	0.359845674	0.089961419
Total Merit:		0.691342756			0.870646766			0.806567917		
SELECTED CONFIGURATION:		_			X			_		

Figure 4.7: Parachute Trade Study

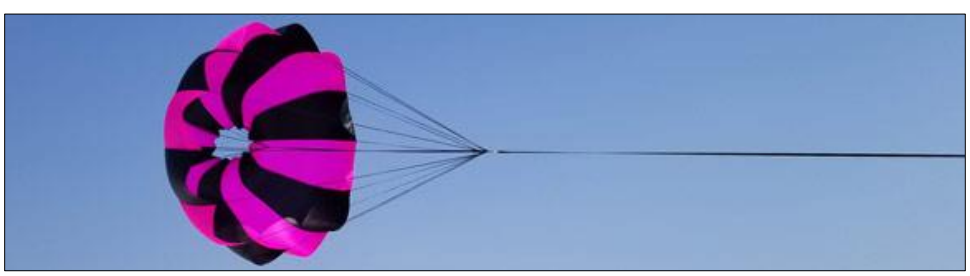

Figure 4.8: Rocketman High Performance Parachute

4.2.2.2.2 Parachute Deployment

As far as deployment is concerned, the team needed a system that can deploy alongside the Lander and release without tangling with the nosecone or other parts of the rocket. The team determined that a parachute on its own would be unlikely to deploy without tangling, and thus a separate system was necessary. Additionally, the team decided that it would be necessary to release the parachute and deploy it in 5 seconds according to Subteam Requirement S.P.1.4. Furthermore, it was decided that to keep from limiting design space in other areas, the parachute deployment could not employ a complicated mechanical system. In this case, one of the front-running solutions—releasing the nose cone with the parachute upside-down—implied the solution of separating the nose cone from both the launch vehicle and Payload Bay. Because of this and in addition to its relatively low merit score, the team excluded such as an option. The team decided that purchasing a parachute bag is the best option as, despite its cost, it would provide the best chance at releasing the chute within the allotted time without tangling with the nosecone. To implement such a solution, the parachute will be packed into the parachute bag before being packed into the payload bay.

DECISION CRITERIA		PARACHUTE CONFIGURATION OPTIONS								
		String			Parachute Bag			Release Nose Cone With Chute Upside Down		
Subteam Requirements:		**Predicted Status:**		**Cleared?**	**Predicted Status:**		**Cleared?**	**Predicted Status:**		**Cleared?**
Release Nosecone?		No solutions implied		Y	No solutions implied		Y	Must Release Nosecone		N
S.P.1.4 – Lander must deploy in 5 seconds		No contradictions		Y	No contradictions		Y	No Contradictions		Y
Payload Wants:	**Weight:**	**Info:**	**Value:**	**Score:**	**Info:**	**Value:**	**Score:**	**Info:**	**Value:**	**Score:**
Chance of Tangling	0.95	High	0.25	0.2375	Low	1	0.95	Medium	0.5	0.475
Price	0.05	N/A	1	0.05	$29	0	0	N/A	1	0.05
Total Merit:		**0.2875**			**0.95**			**0.525**		
SELECTED CONFIGURATION:		_			X			_		

Figure 4.9: Lander Parachute Trade Study

4.2.2.2.3 Parachute Detachment

Upon landing, the Lander must detach from its parachute to prevent the Lander from tipping over through surface wind drag forces. The team decided that the best way to remove the parachute from the payload would be to use nichrome wire to sever a set of expendable cables connecting the parachute to the lander. Currently, this is the only solution the team has prepared for detaching the parachute. Through discussion with the team's electronics personnel, the application of the kinds of required current to thermally sever cables would be possible with the planned Lander electronics capabilities. However, the team is aware of the inherent risks of a thermal separation event causing the release of the Lander prematurely. This risk will be mitigated through proper testing of Lander Control System events, ensuring that the device may only activate after the system has confirmed through both altitude and acceleration sensing that the Lander has reached the ground.

4.2.2.3 **Lander Subsystem**

4.2.2.3.1 Self Orientation Subsystem

Once on the ground, the Lander will almost certainly be on its side and will need to be oriented to the vertical. There are three current concepts to achieve this, all centering on the idea of legs folding outwards. The basis of this design is the creation of a versatile plane of stability underneath the Lander; by actuating its legs, the Lander can get a grip on terrain with many types of surface irregularity. While active, the Self Orientation Subsystem (SOS) will be designed to continuously attempt to align itself with the local gravitational vector within the angular bounds designated by Requirement P.4.3.3 and constrained by Subteam Requirements S.P.1.5 and S.P.1.9 to ensure proper function. The effectiveness of this design relies upon the low center of gravity of the Lander—something that should be continuously monitored as the SOS is physically integrated with the PICS.

4-Leg Flower	3-Leg Pinwheel	4-Leg Pinwheel

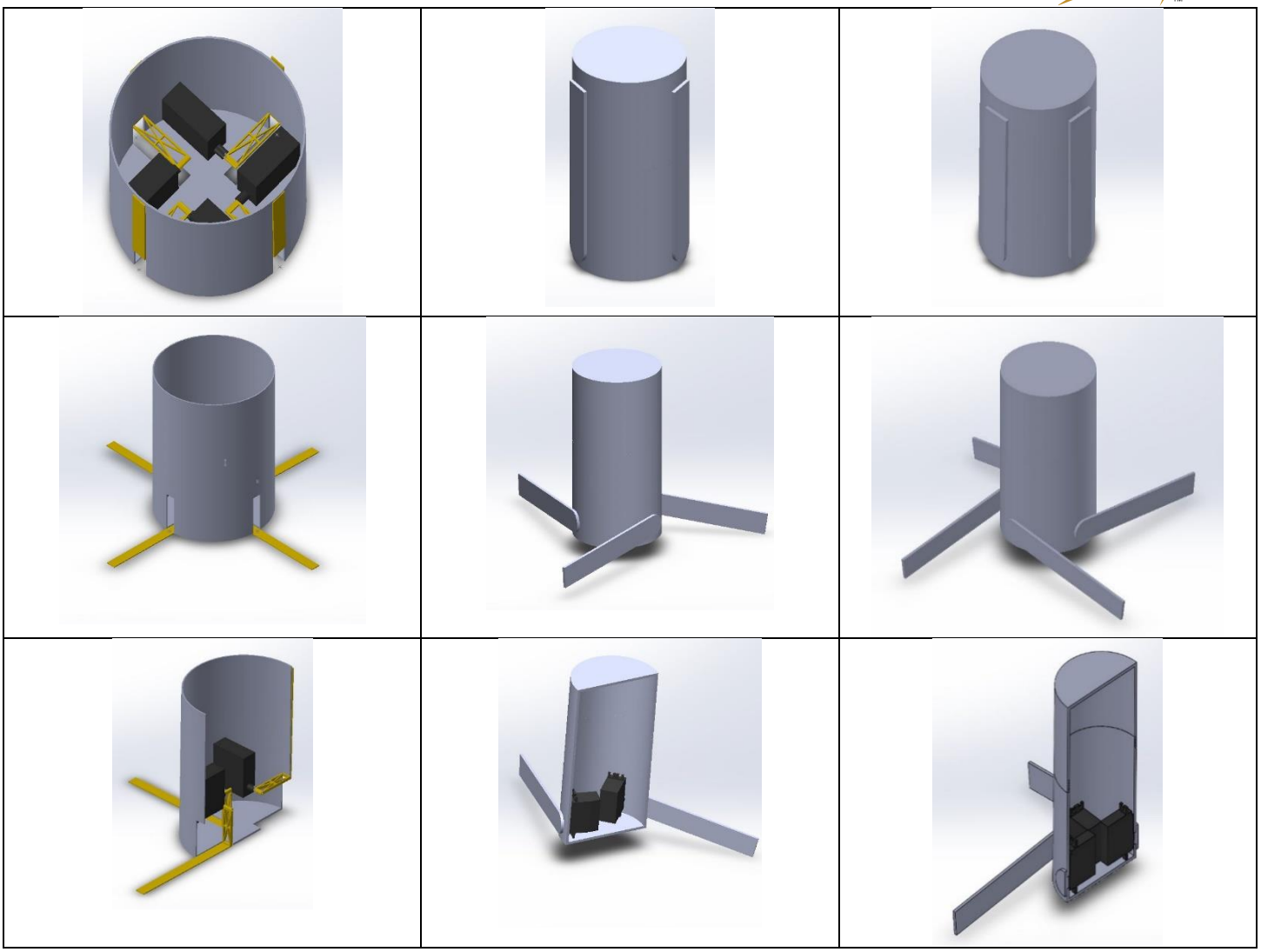

Figure 4.10: Orientation Design Alternative Gallery

The first design concept involves four legs that are parallel to the Lander's body and which fold directly outwards from the Lander, operated by servos housed near the bottom of the Lander. This concept is called the "4-Leg Flower" for the fact the legs seem to bloom outwards like a flower. The second and third concepts consist of a certain number of legs rotating about an axis radial to the body of the lander, instead of folding directly outwards. The legs would rotate to whatever angle would be necessary to achieve vertical orientation, controlled by servos and a microcontroller housed near the bottom of the lander. These concepts are named "3 Leg Pinwheel" and "4 Leg Pinwheel" for the fact they resemble a pinwheel when viewed from above with the legs deployed.

DECISION CRITERIA		ORIENTATION SYSTEM CONFIGURATION OPTIONS								
		4 Leg Flower			3 Leg Pinwheel			4 Leg Pinwheel		
Subteam Requirements:		**Predicted Status:**		**Cleared?**	**Predicted Status:**		**Cleared?**	**Predicted Status:**		**Cleared?**
S.P.1.5 - Ability To Orient		Acceptable		Y	Acceptable		Y	Acceptable		Y
Payload Wants:	**Weight:**	**Info:**	**Value:**	**Score:**	**Info:**	**Value:**	**Score:**	**Info:**	**Value:**	**Score:**
Servo Weight	0.25	240 g	0.75	0.1875	180 g	1	0.25	240 g	0.75	0.1875
Ease of Development	0.3	Low	0.5	0.15	High	1	0.3	High	1	0.3
Ease of Software Creation	0.2	High	1	0.2	low	0.5	0.1	Medium	0.75	0.15
Certainty of Success	0.25	High	1	0.25	Medium	0.75	0.1875	Medium	0.75	0.1875
Total Merit:		**0.7875**			**0.8375**			**0.825**		
SELECTED CONFIGURATION:		_			X			_		

Figure 4.11: Orientation System Trade Study

Servo weight is indicative of how many servos will be incorporated in the lander. In the case of the Lander, minimization of weight is essential to the ability of the Lander to safely descend, but also carries consequences of stability during SOS operation; therefore, the utilization of more servos is generally discouraged, though not necessarily a top priority. Ease of development is a measure of the difficulty to manufacture and assemble pieces of the Lander; in comparison to the more simplified form factor of the "Pinwheel"-type designs, the "Flower"-type design requires much more in terms of space and leg shaping to allow for proper functionality. For the sake of prototyping and testing, this sort of high manufacturing cost is certainly a detriment. Ease of software creation indicates the projected difficulty of coding a program which would enable the lander to function as intended. The team believes that software development will likely be less of a challenge when compared to the physical construction of the SOS, meaning that more complex algorithms are being more seriously considered. Certainty of success is a metric of how confident the team is that the geometry of the proposed solution would result in correct orientation every time. This final metric is tied closely with the previous software metric since each design's unique design situation will lead to a different projected base success rate— despite any technical difficulty in programming the system.

From the above-described alternatives, the 3-Leg Pinwheel design boasts the ability to avoid the weight and construction problems, while sacrificing only an increased difficulty of software development. In fact, with additional research and prototyping, it could be later determined that the 3-Leg Pinwheel is even easier than first thought— something predicted by the team due to its relative mechanical simplicity.

4.2.2.3.2 Panoramic Image Capture Subsystem

There were multiple design solutions for the different types of camera systems that could be used to take the panoramic photo within the Panoramic Image Capture Subsystem (PICS). What the team desired most from a camera system was robustness. This is because the system will need to withstand the impact of landing and other forces the Lander may experience while in flight. The complexity of the system was also important to reduce the amount of work required to create a functioning design. A more complex system would also have more points of failure during the mission's progress. The amount of space required for a solution was also a concern because of the limited size of the planetary Lander. The image quality was not as important as the other wants because the team's requirement for acceptable image quality is low so most cameras will be able to achieve this requirement regardless of the solution.

The first configuration considered was the rotating camera solution because it seemed obvious to take a single panoramic photo. This configuration was ultimately determined to be too complex and not robust enough. The rotating camera configuration would have to include a servo motor to rotate the camera. Having the entire camera system on a rotating base would increase the complexity of the Lander and introduce more points of failure. This solution would also take up more space due to needing a motor. Having multiple static cameras was then considered because the lack of moving parts would decrease the complexity of the system and greatly increase the robustness. The static camera configuration would cost more than the rotating camera system because more cameras would be required. The image quality would also be comparatively worse because the static cameras would need a fisheye lens to increase their horizontal field of view to cover the total area around the Lander. The 3 static camera solution was chosen because it is

more robust than the rotating camera configuration and requires less space and cost when compared to the 4 static camera configuration. While the 3 static configuration has the lowest image quality, the team estimates that this configuration would still produce an image that meets the team's requirements for the panoramic photo.

The team has decided on using the Arducam OV2640 SPI Camera Module as the camera for the PICS. This camera was chosen because it has an integrated microcontroller that can take an image from the camera sensor and store it on a buffer that can be accessed through SPI. There were multiple concerns about interfacing with multiple camera sensors: the number of digital pins required, having to multiplex the data outputs, and writing the software to read the images. The Arducam OV2640 SPI Camera Module does not have any of these concerns. The image data is transferred through SPI instead of being read through multiple digital pins on the camera. This would make the supporting software easier to write and remove the need for multiplexing. While other camera modules without the integrated microcontroller would produce better quality images due to having a higher MP value, the team decided that the benefits of using the Arducam OV2640 SPI Camera Module outweighed the costs of having a lower quality panoramic image.

DECISION CRITERIA		CAMERA CONFIGURATION OPTIONS								
		3 Static Cameras			4 Static Cameras			1 Rotating Camera		
Subteam Requirements:		**Predicted Status:**		**Cleared?**	**Predicted Status:**		**Cleared?**	**Predicted Status:**		**Cleared?**
S.P.13 - Acceptable Image Quality		Acceptable		Y	Acceptable		Y	Acceptable		Y
Payload Wants:	**Weight:**	**Info:**	**Value:**	**Score:**	**Info:**	**Value:**	**Score:**	**Info:**	**Value:**	**Score:**
Complexity	0.2	Medium	1	0.2	Medium	1	0.2	High	0.5	0.1
Cost	0.2	>100$	0.66	0.132	>130$	0.33	0.066	<100$	1	0.2
Image Quality	0.1	Low	0.25	0.025	Medium	0.5	0.05	High	1	0.1
Robustness	0.3	High	1	0.3	High	1	0.3	Low	0.25	0.075
Space Required	0.2	2.25	1	0.2	3	0.75	0.15	6	0.375	0.075
Total Merit:		**0.857**			**0.766**			**0.55**		
SELECTED CONFIGURATION:		X			_			_		

Figure 4.12: Camera Configuration Trade Study

4.2.2.3.3 Lander Control System

4.2.2.3.3.1 *Microcontroller Selection*

DECISION CRITERIA		MICROCONTROLLER OPTIONS								
		STM32F405			ATMEGA328P			MK20DX128		
Subteam Requirements:		**Predicted Status:**		**Cleared?**	**Predicted Status:**		**Cleared?**	**Predicted Status:**		**Cleared?**
S.P.1 — Can control lander		Yes		Y	Yes		Y	Yes		Y
Payload Wants:	**Weight:**	**Info:**	**Value:**	**Score:**	**Info:**	**Value:**	**Score:**	**Info:**	**Value:**	**Score:**
Cost	0.15	$12	0.16	0.024	$2	1	0.15	$6	0.33	0.0495
Max Frequency	0.15	168 MHz	1	0.15	16 MHz	0.095	0.01425	50 MHz	0.3	0.045
Communication Interfaces	0.3	High	1	0.3	Med	0.5	0.15	Med	0.5	0.15
Sleep/Standby Current	0.25	4µA	0.25	0.0625	1µA	1	0.25	3.5µA	0.29	0.0725
Pin Count	0.15	High	1	0.15	Low	0.5	0.075	High	1	0.15
Total Merit:		**0.6865**			**0.63925**			**0.467**		
SELECTED CONFIGURATION:		X			_			_		

Figure 4.13: Lander Microcontroller Trade Study

When considering a microcontroller to control the Lander, the team narrowed its choices down to the STM32F405, ATMEGA328P, and MK20DX128. For the demands of the PICS and SOS, most common microcontrollers would be good enough. The team wanted to select a microcontroller that could be used in future projects as a standard that can be built upon; the team values a microcontroller that could be suited for many applications. The number of different communication interfaces was most important to meeting this desire. While the ATMEGA328P and MK20DX128 have the most commonly used communication interfaces, the STM32F405 has communication interfaces that the other two do not. The STM32F405 also has more channels for the communication interfaces amongst the three. Pin count is also an important part of having a microcontroller that can fit into any application. High pin count is usually associated with more GPIO ports and other features such as timer channels. The pin count somewhat indicates the number of features that a microcontroller has (this is not true for all microcontrollers, but it applies nicely in this trade study). The STM32F405 and

MK20DX128 have high pin counts and can come in packages with fewer pins if space is a priority. The ATMEGA328P does not have a high pin count when compared to the other two microcontrollers.

Another important consideration for the microcontroller was the maximum frequency. A higher max frequency enables intensive calculations to be done faster and for critical interrupts to react quicker. The STM32F405 had the highest max frequency by a large margin. A tradeoff to increased max frequency is a higher power draw. Since having a high frequency may not be required for the PICS and SOS, the main clock frequency of the STM32F405 can easily be changed to decrease its current draw. The sleep/standby current of the microcontroller is important for when the Lander is in the launch vehicle before it is deployed. The Lander must be in a pre-flight state for as long as 18 hours, in accordance with Subteam Requirement S.P.1.12. All three microcontrollers feature a sleep or standby mode that greatly decreases the current draw while disabling most of the microcontroller. While each microcontroller may have multiple of these modes with different current draws, the quantities we used for this comparison were the lowest that still enabled some code to be executed (such as an interrupt) in order to wake up the system due to a GPIO input. The ATMEGA328P had the smallest current draw while the STM32F405 and MK20DX128 had comparable quantities. The standby current draw for the STM32F405 is highly dependent on the frequency of the clock. The number we used in this comparison was the current draw at 168MHz. The standby current can be reduced to a number comparable to the ATMEGA328P with a slower clock frequency. Despite any possible current draw capabilities, the balance of merit tended to sway towards utilizing the STM32F405 for the Lander's purposes.

4.2.2.3.3.2 *IMU selection*

The team determined that, regardless of the orientation method, an IMU would be needed to record the Lander's angle of orientation from the vertical. The team researched methods for determining the absolute orientation of the Lander, determining that to accurately measure orientation, a gyroscope, an accelerometer, and a magnetometer would be necessary. To integrate all components into the final design, an integrated circuit (IC) for each component could be soldered onto the control board or a single IC with all the desired components could be used. For simplicity, the team chose to pursue the latter option. However, combining all the data from these three sensors into an absolute orientation measurement would be a significant undertaking. Furthermore, using an algorithm developed by the team would require a significant amount of testing to verify the accuracy of the measurement. This led the team to pursue the BNO085—a System in Package (SiP) that integrates all the necessary hardware and a CPU using special firmware. The firmware, created by CEVA's Hillcrest Labs, integrates data from all the sensors and can calculate additional measurements, like angular position. The firmware on the BNO085 has already been extensively tested and eliminates the complexity and time required to develop a discrete design.

4.2.2.3.3.3 *Transceiver Selection*

The team requires a reliable, long-range transmitter and receiver to send and receive location data and pictures. The team set a requirement of landing within 1 mile of the team's Ground Control Station (GCS) computer, so the selected module needed a minimum range of 1 mile—in accordance with Subteam Requirements S.P.1.15 and S.P.1.16. Additionally, due to space constraints on the Lander, the transceiver also had to be relatively small. There were a few options considered. The first module to be considered was the REYAX RYLR896. While this module did meet the range requirement that the team needed, its signal amplification was small compared to other choices; this raised concerns of signal strength. The next option considered was the RFM95W. While it has a moderately high signal amplification, its range is its greatest limiting factor. It was still above the 1mi threshold, but only by a small margin. That small margin brought concerns about the signal integrity near the 1-mile mark. The next option considered was the HUM-900-PRO. It had a high signal amplification and a range that far exceeded the target distance. Further, despite the HUM-900-PRO meeting the requirements, the XBEE-PRO 900HP far surpassed its expected range. Additionally, the team has had past experience using XBEE products.

The team has selected the XBEE-PRO 900HP module for the transceivers. One will be integrated into the Lander, and one will be integrated into the GCS. These were selected due to their long-range and high gain. The team marked the range capabilities of the transceiver as a major priority, due to the Lander potentially landing up to 1mi away from the

GCS. When paired with a high gain antenna, the XBEE-PRO 900HP far exceeds the team's range needs, which gives assurance of the transmission integrity of the modules.

DECISION CRITERIA		TRANSCEIVER CONFIGURATION OPTIONS											
		REYAX RYLR896			RFM95W			HUM-900-PRO			XBEE-PRO 900HP		
Subteam Requirements:		**Predicted Status:**		**Cleared?**	**Predicted Status:**		**Cleared?**	**Predicted Status:**		**Cleared?**	**Predicted Status:**		**Cleared?**
S.P.1.7 - Signal Connection		Acceptable		Y	Acceptable		Y	Acceptable		Y	Acceptable		Y
S.P.1.17 - Transmit Lander Location		Acceptable		Y	Acceptable		Y	Acceptable		Y	Acceptable		Y
S.P.1.15 - Signal Range		> 2.8 miles		Y	< 1.24 miles		Y	< 8 miles		Y	< 28 miles		Y
Payload Wants:	**Weight:**	**Info:**	**Value:**	**Score:**	**Info:**	**Value:**	**Score:**	**Info:**	**Value:**	**Score:**	**Info:**	**Value:**	**Score:**
RF Power Amplifier	0.35	+15 dBm	0.6	0.21	+20 dBm	0.8	0.28	+25 dBm	1	0.35	+24 dBm	0.96	0.336
Range (miles)	0.25	2.8 - 9.3	0.33	0.0825	< 1.24	0.04	0.01	< 8	0.29	0.0725	< 28	1	0.25
Cost	0.1	< $20	0.75	0.075	< $15	1	0.1	< $25	0.6	0.06	< $45	0.33	0.033
Space Required (No Antenna)	0.2	High	0.25	0.05	Low	1	0.2	Medium	0.5	0.1	High	0.25	0.05
Manufacturability/Integration	0.1	Easy	1	0.1	Medium	0.5	0.05	Hard	0.25	0.025	Medium	0.5	0.05
Total Merit:			**0.5175**			**0.64**			**0.6075**			**0.719**	
SELECTED CONFIGURATION:			_			_			_			X	

Figure 4.14: Lander Transceiver Trade Study

4.2.2.3.3.4 *GPS Selection*

The Lander will include a GPS module for aid in recovery and to satisfy Subteam Requirement S.P.1.17. Since the Lander will include an RF transmitter, the team decided a separate GPS transmitter was not necessary. Therefore, the team searched for a module that could interface directly with the main microcontroller. The team settled on the SAM-M8Q module from u-blox. This module contains a built-in antenna and requires little RF experience to use. Also, this module can communicate via I2C or UART, which gives the team more flexibility in terms of integrating with the microcontroller. In terms of mechanical integration, the module can be soldered directly to the control PCB, soldered to a custom breakout board, or a breakout board can be bought from a commercial supplier such as Sparkfun. The low level of RF experience required and the flexibility in integration were the primary factors in selecting the SAM-M8Q module.

4.2.3 Selected PLS System Design

4.2.3.1 **PLS Major Subsystems**

4.2.3.1.1 Retention and Deployment

The team will be using a gravity-driven deployment method known as the Gravity Pizza Pusher. This solution will retain the Lander during flight and protect it from flight loads using the previously described Pizza Table design—a circular platform that fits within the Payload Bay and has two legs that go around the payload and connects to the nosecone. The Pizza Table is then constrained in the Payload Bay through a system of slots and stops that allow it to slide axially along the rocket a certain distance to allow the Lander to deploy. The Lander will be further constrained within the launch vehicle through a set of rails. Thus, the Lander will be constrained on all sides—radially by the two legs of the Pizza Table and the 2 roller rails, meanwhile being constrained axially by the nosecone and Pizza Table platform. For deployment, a fast-acting DC motor connected to the bottom of the payload bay will rotate a lead screw, retracting it from a Pizza Table platform-mounted lead nut, thus releasing the Pizza Table. This motor will be activated when the connected R&D control system senses that the rocket is within the deployment altitude range and after the main parachute has deployed; this will require the use of both an altimeter to determine the vehicle's altitude and an IMU to sense main parachute's deployment. After the Pizza Table is released by the motor, it will be allowed to be pulled downward by the force of gravity until it hits a set of stoppers at the end of the Payload Bay fuselage. At this point, the Lander will no longer be secured on two of its sides by the rail system and will be free to fall out. The Lander's parachute will deploy after the Lander falls a safe distance from the rocket using a parachute deployment device which will either be a parachute bag or a Velcro wrap, as described in the *Descent and Landing* section.

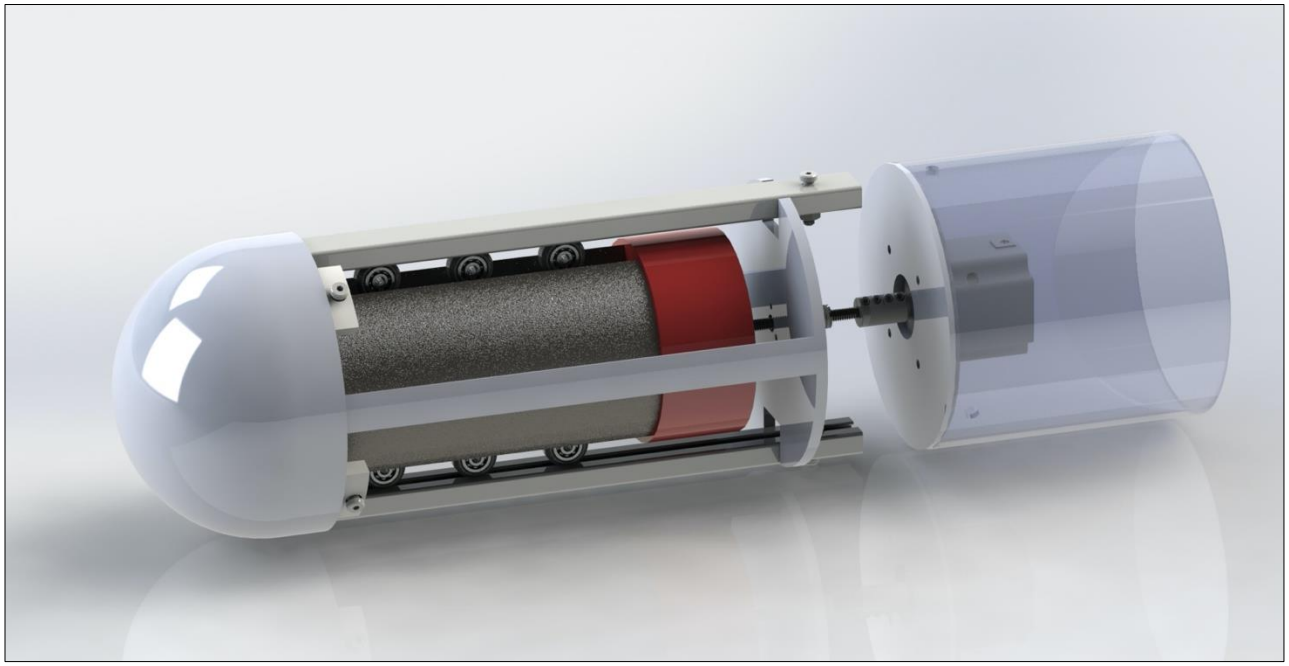

Figure 4.15: *Payload Secured for Flight in the Pizza Table*

This design poses numerous advantages and manages the loads associated with flight effectively. Primarily, this design maintains the mechanical attachment of the launch vehicle's nosecone after use. Instead of detaching and becoming an additional independent section—which would require its own parachute—the nosecone can be recovered along with the vehicle. Secondly, the arrangement of load-bearing members and locking system transfer loads around the Lander and into the vehicle airframe. During ascent, the forces of acceleration caused by the above nosecone will be offloaded directly into the airframe by the nosecone's outer lip. Meanwhile, the weight of the lander will be distributed amongst both the Pizza Table legs (and hence the airframe, through the nosecone) as well as through the locking lead screw. During descent, flight loads will eventually become flipped as the vehicle's main parachute deploys. In this case, all loads will be transferred as tension through the lead screw; while this reduces the distribution of weight, the accelerations/forces experienced during descent are predicted to be exceeded by those during ascent. That said, further designs may incorporate a thrust structure to better distribute these loads around the locking motor, rather than forcing the motor to handle high axial loads.

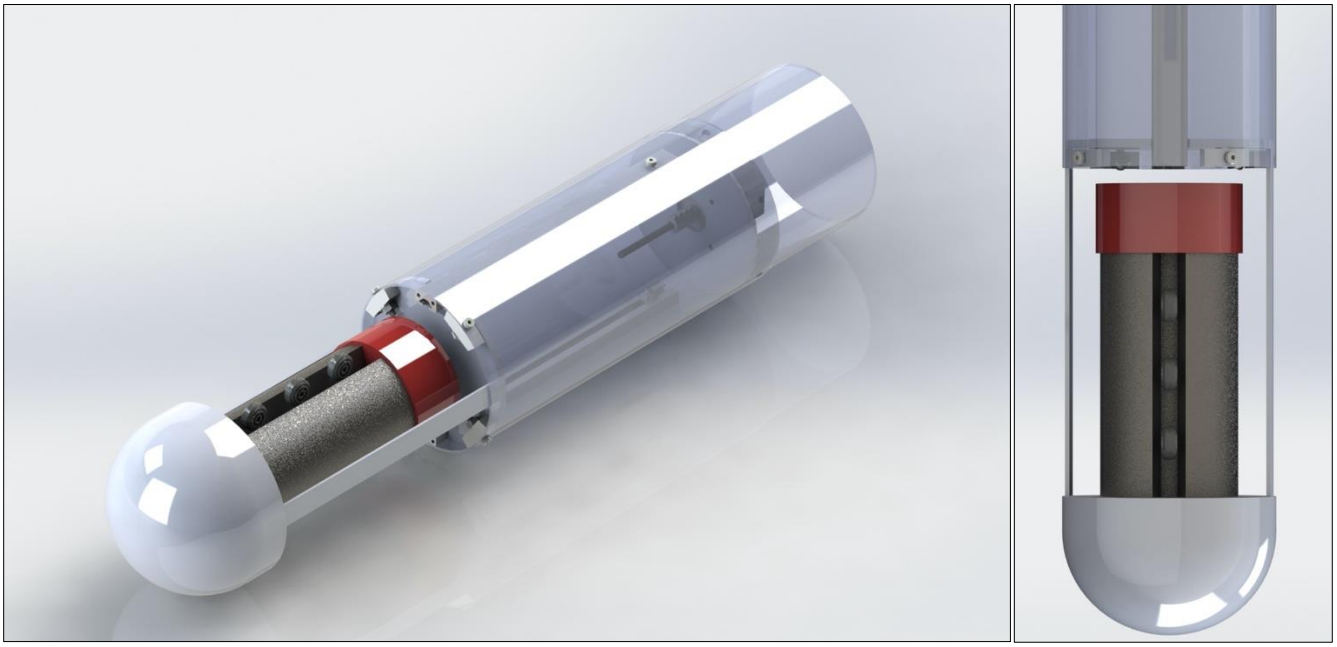

Figure 4.16: *Payload ready to fall out of the Pizza Table R&D*

While the team decided the Gravity Pizza Table to be the best solution of those discussed, that does not mean it is without issue. Two possible problems the team has identified are the Lander getting stuck during deployment and the Pizza Table legs becoming damaged when the upper airframe lands. The former will be addressed by performing sub-scale tests to discover if the Lander will fall out as planned. The second will be addressed by performing more in-depth FEA, as some initial FEA research was simplified and inexact relative to the final planned design; after checking whether the subsystem is really in danger if it still appears to be a concern, the team will investigate strengthening the Pizza Table's legs or finding a way to retract them after deployment. Any solution will likely involve the redesign of the Pizza Table's legs towards a more buckling-resistant form.

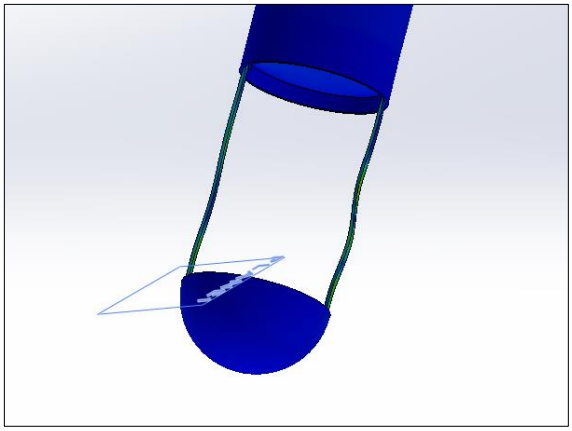

Figure 4.17: Preliminary Simulated Buckling Failure Mode of the Pizza Table Upon Landing

4.2.3.1.2 Descent and Landing

The Lander will slow its descent via parachute. As discussed in the *Parachute Selection* section, the team selected the Rocketman high performance parachute. Such will be attached to the Lander with a connecting cable to the approximately 3lb Lander; a 23" parachute will put the Lander at the desired descent rate of slightly more than 20fps (in this case the descent rate is 20.24fps). To ensure the parachute will not tangle with the rest of the Lander, the team decided to place the parachute within a Rocketman parachute bag. The parachute will be packed into the parachute bag, connected to the Lander, and then packed on top of the Lander within the R&D of the Payload Bay. The parachute will be oriented such that the Lander and parachute will fall out of the launch vehicle lander-first. The team decided that the

cable connecting the parachute and Lander will be surrounded by nichrome wire so that the parachute may be severed from the Lander when a current is applied. Through discussion with the team's electronics personnel, the application of the kinds of required current to thermally sever cables would be possible with the planned Lander electronics capabilities. This method of release must be brief, but powerful, reducing the risk of losing battery power. However, the team is aware of the inherent risks of a thermal separation event causing the release of the Lander prematurely. This risk will be mitigated through proper testing of Lander Control System (LCS) events, ensuring that the device may only activate after the system has confirmed through both altitude and acceleration sensing that the Lander has reached the ground. In the case of altitude, the Lander Control System will only activate the detachment method once the altimeter has returned to the starting altitude. The Lander will get additional confirmation of landing by the onboard IMU; the Lander will not detach its parachute until the LCS has been signaled by the R&D during deployment, the altimeter confirms grounding, and the IMU confirms grounding.

4.2.3.1.3 Lander Subsystem

4.2.3.1.3.1 *Self Orientation System*

The Self Orientation System (SOS) will include three legs that all simultaneously rotate along a plane tangent to the Lander (see graphics below), orienting the Lander. Each leg will be rotated by a servo housed in the Lander. The main microcontroller in the Lander Control System (LCS) will connect to the servo drivers which then will drive the servos. The servo drivers will draw current directly from the battery through the power distribution system. This will make sure that a large amount of current is not drawn through the microcontroller's pins as that can damage them. The LCS will also contain an IMU that will measure the orientation and the microcontroller will use that data to select the servos to use. The IMU will be discussed more in the LCS section.

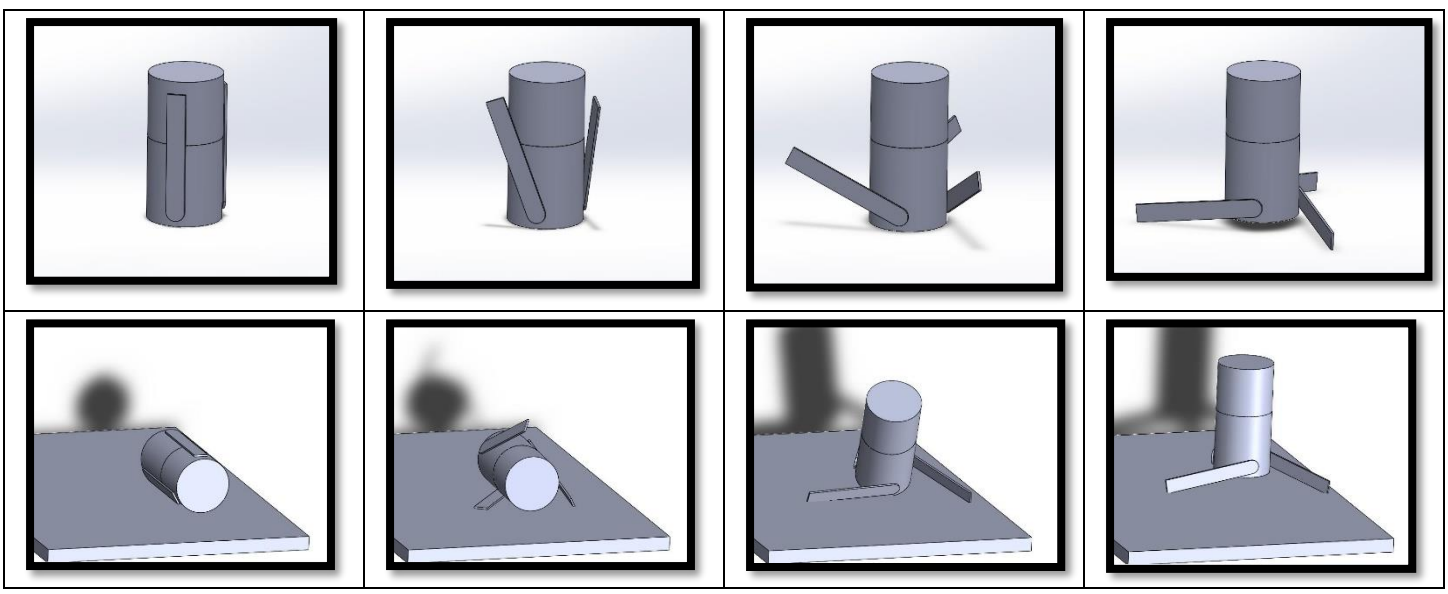

Figure 4.18: Orientation Principle of Motion Demonstration

Above is a slide gallery of the principle of operation of the SOS. The control method will likely need to combine multiple stages to produce the desired result in any terrain, as specified in Subteam Requirement S.P.1.5. The first motion which must be completed is the extension of the SOS's legs to produce a plane of support beneath the Lander; since a plane consists of three points, a sideways lander need only make ground contact with any two legs and the central body of the Lander. Once this plane of support is generated, the SOS servos must complete a lifting motion, up-righting and sitting the lander onto its central base. Considering that the Lander is most certainly not going to be on level terrain—as depicted in the demonstration above—the SOS must complete a final orientation maneuver to ensure that the local gravitational vector is aligned within the angle bounds provided in Requirement P.4.3.3. This final motion will be unlike the previous in that the legs may travel different distances—perhaps even backwards. The control loop needs to continuously move and search for the optimal position which will satisfy the above requirement. Once satisfied, the SOS will have completed its purpose.

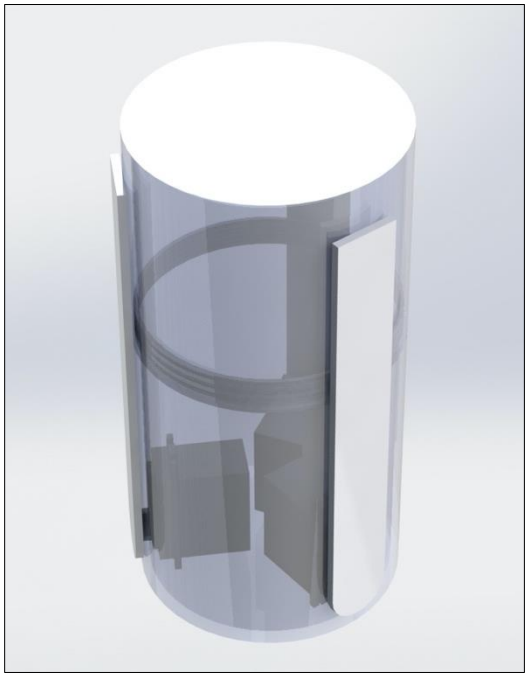

Figure 4.19: Self Orientation System Integrated with Lander

This design was chosen over the alternatives because of its weight advantage, and ease of development. The 3 Leg Pinwheel design will take up less space, weigh less, and will be easier to both manufacture and combine parts in the final assembly. These benefits outweigh any potential difficulties of coding. This design will be tested rigorously and improved upon to ensure it achieves its goal. The legs in particular may be manufactured using polycarbonate plastic to sustain various bending loads, but could alternatively be produced using FDM additive manufacturing, allowing for increased versatility in shape. The internal structure of the final Lander will likely include multiple mounting plates upon which to fasten electronics components. The SOS will need to be designed and tested with the understanding that the mounting locations of plates could have an adverse effect on the center of gravity of the Lander, lowering its ability to reliably upright.

4.2.3.1.3.2 *Panoramic Image Capture*

The Panoramic Image Capture System (PICS) includes three wide-angle lens cameras and an image processing unit within the team's Ground Control Station (GCS). The cameras will consist of 3 Arducam OV2640 SPI Camera Modules. The cameras will be placed in a circular pattern near the top of the Lander. Each camera has a 120° horizontal FOV lens so that the combined horizontal FOV of all three cameras is 360°. Once the SOS has completed self-orientation, all three images will be captured simultaneously and automatically stored in the buffer located on each camera's control board. The microcontroller in the Lander Control System (LCS) will communicate with the cameras via I2C to set the camera sensor's settings and SPI to read the image data from each camera's integrated buffer. When the images are read from the camera buffer, they will be stored on an SD card because the microcontroller does not have enough internal memory to hold all the images. From the SD card, the images will be sent via RF transceiver to the GCS. The SD card and the RF transceiver are part of the LCS and will be further detailed in that section. After the GCS has received the image data, the image processing unit will produce the combined panoramic image, which will be saved and displayed on the GCS screen.

One of the challenges that the team expects with this solution for the PICS is obstruction from uneven terrain. Depending on how far the SOS can rise the Lander, the surrounding terrain may be such that the cameras may not be able to see the surrounding area. This could occur if the Lander is in a shallow hole or between rows in a tilled field. The team will have to ensure that the height of the Lander in combination with the lift from the SOS will enable the PICS to take a successful panoramic image anywhere in the landing area. The team will conduct tests with a prototype to ensure that this solution will be able to produce the panoramic photo. The system will be able to be tested independently of all other major subsystems of the PLS for photo capture. Other tests will be conducted for SOS and PICS integration to determine if

PICS will wait until the SOS has completed self-orientation. Testing of the image transfer using the RF transceiver is covered in the LCS section.

4.2.3.1.3.3 *Lander Control System*

The SOS, PICS, and other components on the Lander will be controlled by a single unified control system. The Lander Control System (LCS) will use an STM32F405 as the main microcontroller. All peripheral devices will interface with the main microcontroller, as shown in the Figure below. Note that the below Figure is preliminary and some of the peripheral devices may use different protocols in the final design. Also, note the power distribution to the peripheral devices. Each of the devices contained in the LCS will serve to satisfy a NASA or team requirement not covered in PICS or SOS, or it will be used by multiple systems or requirements. The peripheral devices will include a GPS module, a transceiver module, an altimeter, an IMU, and an SD card.

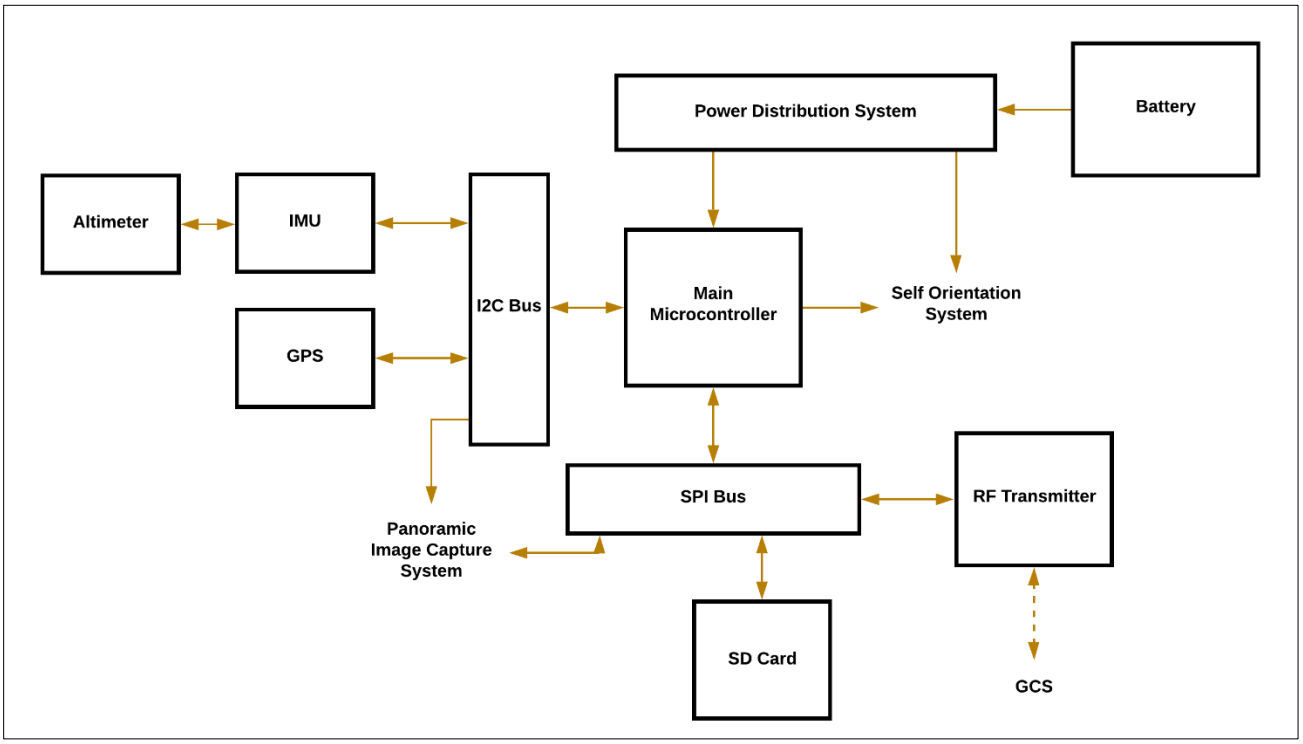

Figure 4.20: Lander Control System Diagram

The main microcontroller will be the STM32F405. The main microcontroller will play a role in the PICS and the SOS. As covered in the PICS section, the microcontroller will transfer data between the cameras. The SOS section also describes how the main microcontroller will control the servo drivers. The main microcontroller will also implement the algorithm that used the IMU data to orientate the Lander. The SD card will have several functions in the LCS; It will serve as the primary repository for any data collected during the mission. This will include image data, GPS data, error logs, etc. The SD card will be of industrial grade to ensure security during flight and the SD card holder will be tested to ensure it can meet the rough loading conditions of rocket flight.

The RF transceiver will be the Lander's only means of communicating with the GCS. Its primary objective is to transmit the image data from PICS to the GCS for processing. Its secondary objectives include transmitting GPS data, error codes, and any other transmissions the team determines to be necessary in the future. The transceiver will be the XBEE-PRO 900HP. The antenna used by the selected transceiver module will allow the LCS to communicate with the GCS anywhere within the 2,500' radius of the recovery area. The main microcontroller will ensure that there is a stable connection before any transmissions and the GCS will confirm receipt of any transmission.

Additionally, the RF transceiver will undergo several tests to determine if its performance is sufficient to meet the required specifications. These tests will include basic distance tests to make sure that the transceiver meets the distance requirements in optimal conditions. Once the Lander is fully prototyped, the transceiver will need to be tested again to ensure that the other systems will not interfere with transmissions. Given its primary objective, all tests of the transceiver will include the transfer of image data.

The GPS module is included to aid in the recovery of the Lander and to satisfy Subteam Requirement S.P.1.17. The main microcontroller will poll GPS data at select times during the mission and transmit that data to the GCS. The GPS module will be the SAM-M8Q.

The IMU will primarily be used to detect orientation for SOS. However, it is included in the LCS section because it will have a secondary mission of informing the LCS of various states of flight. This includes launch, main parachute deployment, Lander deployment, Lander parachute deployment, and landing. To aid in the detection of these events, an altimeter will also be used. Detection of these phases of flight is necessary for timing. For example, the LCS needs to know it is on the ground before SOS can start orientation. The IMU will be the BNO085 and the altimeter will be the BMP280. The BNO085 supports the integration of the BMP280 directly and the team plans to make use of this feature.

4.2.3.2 **PLS Subsystem Integration**

4.2.3.2.1 Retention and Deployment

The R&D subsystem will need to integrate with several other systems on the rocket. Firstly, it will need to integrate with the airframe of the launch vehicle. The slots and rail system will require holes being drilled into the payload bay fuselage to be bolted and secured. The Pizza Table itself will need to be properly fit into the payload bay and the servo that unscrews its locking mechanism will need to be securely connected to the bottom bulkhead of the payload bay. The altimeter and battery for the R&D system will need to be mounted within the coupler below the payload bay, requiring additional holes for air pressure detection. Additionally, the nosecone will need to be either connected to the legs of the Pizza Table or the Pizza Table and nosecone will need to be manufactured as a single piece. As for integrating the Lander with the R&D system, the Lander will need to be properly sized to fit snugly into the Pizza Table and match up with the rail system. Finally, the Lander's parachute will be connected to the Pizza Table through a cord so that once the Lander has fallen a suitable distance away from the rocket it will be deployed.

4.2.3.2.2 Descent and Landing

The parachute system will mainly need only integrate with the Lander itself. This will be done by connecting the two with a connecting cable surrounded by nichrome wire, such that the cable can be severed when necessary by running a current through the nichrome. The parachute bag is also likely to be tied to the inside of the R&D as described above; this will ensure the reusability of the parachute bag. The final detachment of the parachute will need to be executed with the help of the Lander Control System.

4.2.3.2.3 Lander Subsystem

4.2.3.2.3.1 *Self Orientation Subsystem*

As described at length, the SOS will be highly reliant on the LCS in order to operate correctly—if at all. However, the SOS must also be able to operate while within the R&D Payload Bay. The R&D's guide rails are intended to allow ease of deployment and will take up radial space along with the SOS's legs. Additionally, while the bottom surface of the Lander may be designed for ease of orientation, it must also be made to interface with the bottom of the launch vehicle's nosecone; the team has already considered utilizing the free-form nature of these two components to ensure the reliable deployment of the Lander, perhaps by adjusting the concavity of either surface.

4.2.3.2.3.2 *Lander Control Subsystem*

The LCS will need to communicate with the Ground Control Station (GCS)—the body of which was originally used as the controller for the drone in last year's flight. After the PICS has taken the photos, the LCS will need to transfer the images to the GCS using its radio transceiver. The radio transceiver selected for the LCS is the same transceiver that the GCS

uses. This will make communicating between the GCS and LCS easier and allow the team to use the same communication protocol used last year with slight modifications. The team plans for the GCS to automatically run the image processing necessary to create the panoramic image once the images have been received from the Lander.

4.3 AeroBraking Control System

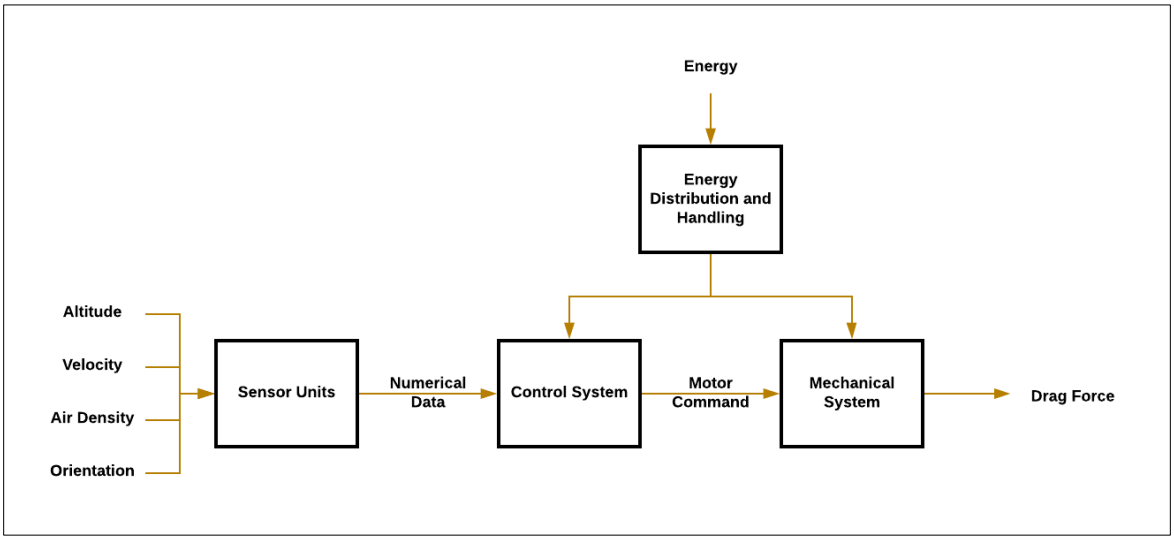

Figure 4.21: ABCS Functional Block Diagram

4.3.1 Overview

The AeroBraking Control System (ABCS) is designed to provide the launch vehicle with active control over its apogee, increasing the team's apogee accuracy score. ABCS subsystems include the airbrakes mechanical system, the associated control software, and the sensor suite used to obtain flight data for calculations. Once the flight begins, the ABCS will remain in a passive state until the motor burn is complete. Following this, the onboard control software will collect sensor data about the vehicle's velocity, acceleration, altitude, and orientation; this data will be used to determine how much drag the vehicle will need to experience to achieve the desired apogee. The control software will then generate the motor commands necessary for the mechanical system to deliver said drag force, allowing the vehicle to control its altitude autonomously and dynamically with far greater accuracy compared to the same vehicle without active control systems. The ABCS system will be designed to provide the minimum possible deviation from the target apogee of 4100'.

4.3.2 Design Level ABCS Subsystem Alternatives

4.3.2.1 **Aerodynamic Design**

4.3.2.1.1 Plate Shape and Structural Selection

Three systems were considered following the initial research phase: the umbrella method, the umbrella method with coupler, and the perpendicular plate crank method. A system using the perpendicular plate method consists of actuating semi-circular plates radially outwards; this system is easier to manufacture but constrains the system to the rocket's diameter and does not have a fail-safe. The umbrella method is pivoting the aeroplates outward away from the vehicle. Under multiple failure modes, including the lead screw and support linkage breaking, the aeroplates will fold back up not affecting the rocket's stability. Since the aeroplates lay flush to the vehicle, their length can be modified as the team needs throughout the design process. The drawback to this method is it exposes the inside of the mechanical system and weakens the rocket—the airframe is the only thing transmitting the main motor's force to the rest of the vehicle, so having many open areas in it is not ideal. The umbrella method with coupler also pivots the aeroplates outwards away from the vehicle. However, the addition of a coupler under the aeroplates maintains the structural integrity of the vehicle. Also, with a flush surface for the plates to rest after actuation, the system can have a decreased amount of non-deployed drag. This method provides the system with the ability to increase or decrease the overall area of the aeroplates. It also

accounts for the previously stated failure modes; if the system malfunctions, it will fold back up, not affecting the rocket's stability.

DECISION CRITERIA		DRAG MECHANISM CONFIGURATION OPTIONS								
		Umbrella With Coupler			Pusher Design			Exposed Umbrella		
Subteam Requirements:		Predicted Status:		Cleared?	Predicted Status:		Cleared?	Predicted Status:		Cleared?
S.P.2.1 -- Prevent fin stall		No stall		Y	No stall		Y	No stall		Y
S.P.2.2 -- Min stability of 2.1cal		Possible		Y	Possible		Y	Possible		Y
S.P.2.6 -- Activate in < 1s		< 1s		Y	< 0.5s		Y	< 1s		Y
(Payload) Wants:	Weight:	Info:	Value:	Score:	Info:	Value:	Score:	Info:	Value:	Score:
Mass	0.1	Medium	0.5	0.05	Low	0.75	0.075	Low	0.75	0.075
Complexity	0.1	Medium	0.5	0.05	Low	0.75	0.075	Medium	0.5	0.05
Cost	0.15	Low	0.25	0.0375	Low	0.25	0.0375	Low	0.25	0.0375
Strength	0.25	High	1	0.25	Medium	0.5	0.125	Low	0.25	0.0625
Possible Drag Force	0.4	High	1	0.4	Low	0.25	0.1	High	1	0.4
Total Merit:		0.7875			0.4125			0.625		
SELECTED CONFIGURATION:		X			_			_		

Figure 4.22: Airbrakes Plate Shape Trade Study

4.3.2.2 **Software Design**

4.3.2.2.1 Control System Selection

For the control system, options were considered for their speed, safety, reliability, accuracy, and difficulty. Speed was quantified by how long it would take a microcontroller to react to a given input, and this factor was tested through simple programs that emulated the ABCS's intended function. The other four factors were decided qualitatively; in general, systems that had more failure modes were considered less safe or reliable, and systems that were thought to control the vehicle more effectively were rated higher in accuracy. Difficulty was a measure of how long it was believed the research and development of each option would take, as the schedule for the ABCS must account for time spent creating and tuning the control system. In the end, three options were considered: a closed-loop control system that would continuously take in sensor data and output the motor commands necessary to alter the vehicle's drag; a pre-programmed deployment of the airbrakes at a previously calculated altitude; and a compromise "checkpoint" system that would assess the vehicle's state at several key altitudes and determine whether the airbrakes needed to be deployed and by how much. The team eventually settled on the continuous closed-loop system as the selected method of control for its accuracy and reliability; however, if further testing does not pan out, the "checkpoint" system will be used as a backup.

DECISION CRITERIA		CONTROL SYSTEM CONFIGURATION OPTIONS								
		Continuous Closed-Loop			Pre-Programmed Deployment			Checkpoint Deployment		
Subteam Requirements:		Predicted Status:		Cleared?	Predicted Status:		Cleared?	Predicted Status:		Cleared?
S.P.2.4 -- Abort in case of failure		Close flaps		Y	Will not deploy		Y	Will not deploy		Y
S.P.2.5 -- Operate after burn		Programmable		Y	Programmable		Y	Programmable		Y
Payload Wants:	Weight:	Info:	Value:	Score:	Info:	Value:	Score:	Info:	Value:	Score:
Speed (reaction time)	0.1	~6ms	0.17	0.017	<1ms	1	0.1	~3ms	0.66	0.066
Safety (ranked)	0.25	3	0.8	0.2	1	1	0.25	2	0.9	0.225
Reliability (ranked)	0.25	2	0.75	0.1875	3	0.5	0.125	1	1	0.25
Accuracy	0.3	High	1	0.3	Low	0.25	0.075	Medium	0.5	0.15
Difficulty (Out of 5)	0.1	4	0.4	0.04	1	1	0.1	2	0.8	0.08
Total Merit:		0.7445			0.65			0.771		
SELECTED CONFIGURATION:		X			_			_		

Figure 4.23: Control System Trade Study

4.3.2.2.2 Microcontroller Selection

For the microcontroller of the ABCS, the four factors used when searching for alternatives were speed, cost, size, and available support. For such an application involving high vehicle speeds and real-time data processing, a faster board is better suited to perform the necessary calculations efficiently. However, the team also has other constraints; the board must be inexpensive or have a justifiable reason for the increased cost, and it must be small enough to fit in the vehicle alongside the mechanical system. Support for each board was also considered, as more documentation on the electronics will allow for faster development of the control software. In the end, the three options considered were the Teensy 3.6,

the Teensy 4.0, and the Arduino Uno, all commercially available boards that fell within the team's budget as well as the designated size and mass constraints. The Arduino Uno was ultimately disqualified for its lack of a floating-point unit (FPU) as it was believed that this would severely impact its performance during flight. Both the Teensy 3.6 and the Teensy 4.0 had FPUs and were much faster than the Arduino, but the Teensy 4.0 was chosen for our system, as it is faster, cheaper, and smaller than its 3rd generation counterpart.

DECISION CRITERIA		MICROCONTROLLER CONFIGURATION OPTIONS								
		Teensy 3.6			Arduino Uno			Teensy 4.0		
Subteam Requirements:		**Predicted Status:**		**Cleared?**	**Predicted Status:**		**Cleared?**	**Predicted Status:**		**Cleared?**
S.P.2.3 - Able to control altitude (altimeter)		Has FPU		Y	No FPU		N	Has FPU		Y
S.P.2.6 - Activate control surfaces (motor)		GPIO, PWM pins		Y	GPIO		Y	GPIO, PWM pins		Y
Payload Wants:	**Weight:**	**Info:**	**Value:**	**Score:**	**Info:**	**Value:**	**Score:**	**Info:**	**Value:**	**Score:**
Support (documentation)	0.2	Medium	0.9	0.18	High	1	0.2	Medium	0.9	0.18
Cost	0.15	$29.25	0.26875	0.0403125	$23.00	0.425	0.06375	$19.95	0.50125	0.0751875
Speed	0.4	180 MHz	0.3	0.12	16 MHz	0.02666667	0.010666667	600 MHz	1	0.4
Size	0.25	1.68 sq in	0.813333333	0.203333333	5.67 sq in	0.37	0.0925	0.98 sq in	0.891111111	0.222777778
Total Merit:		**0.5436**			**0.3669**			**0.8780**		
SELECTED CONFIGURATION:		_			_			X		

Figure 4.24: Microcontroller Trade Study

4.3.2.2.3 IMU Selection

The IMU selection was based on three models capable of providing the necessary states required for effective characterization of rocket dynamics. The dynamic states of most concern are the vertical acceleration of the rocket, data for which will be used to predict the burnout of the rocket motor, and position of the rocket in 3D space and the rocket's angular velocity about its primary axes, both of which will be used to characterize the stability of the rocket during coast. Other than evaluating the types of measurements provided by the IMUs, another focus of the study assessed additional hardware that would be required to filter the IMU measurements into a useful quantity that the microcontroller could use to actuate the airbrakes. Lastly, access to datasheets and/or integration documentation was also evaluated. As shown in Figure 4.12, the three IMUs that were evaluated were the LSM9DS1, BNO085, and ISM330DLC. All three are similar in that they are all 9-axis IMUs, which includes a 3-axis accelerometer, 3-axis gyroscope, and 3-axis magnetometer. The primary reason only 9-axis IMUs were considered was because of their higher performance resiliency and lower susceptibility to the build-up of drift errors, compared to 6-axis units. The three sensors are similar in that they all provide the necessary states needed to characterize rocket dynamics, their communication protocols are compatible with the Teensy 4.0, they all have adequate documentation readily available, and the accuracy of their data output is identical. However, the BNO085 sets itself apart with its additional onboard signal processing algorithms, which provide calibrated orientations and states, such as acceleration and angular velocity. Based on the additional signal processing capabilities, the BNO085 was chosen to fly for the ABCS.

DECISION CRITERIA		IMU/FUSION SENSOR CONFIGURATION OPTIONS								
		LSM9DS1			BNO085			ISM330DLC		
Subteam Requirements:		**Predicted Status:**		**Cleared?**	**Predicted Status:**		**Cleared?**	**Predicted Status:**		**Cleared?**
S.P.2.8 Consistent Data Format		Additional Hardware Req'd		Y	In-Built Data Processing		Y	Additional Hardware Req'd		Y
S.P.2.9 Required States		Sensor provides req'd states		Y	Sensor provides req'd states		Y	Sensor provides req'd states		Y
Airbrakes Wants:	**Weight:**	**Info:**	**Value:**	**Score:**	**Info:**	**Value:**	**Score:**	**Info:**	**Value:**	**Score:**
Minimal Additional Hardware	0.3	Low	0.25	0.075	Med	0.5	0.15	Low	0.25	0.075
Communication Protocol	0.05	High	1	0.05	High	1	0.05	High	1	0.05
Integration with MCU	0.2	Low	0.25	0.05	Med	0.5	0.1	Low	0.25	0.05
Required States are Outputs	0.2	High	1	0.2	High	1	0.2	High	1	0.2
Available Documentation	0.15	High	1	0.15	High	1	0.15	High	1	0.15
Output Data Accuracy	0.1	High	1	0.1	High	1	0.1	High	1	0.1
Total Merit:		**0.625**			**0.75**			**0.625**		
SELECTED CONFIGURATION:		_			X			_		

Figure 4.25: IMU/Fusion Sensor Trade Study

4.3.2.2.4 Altimeter Selection

The altimeter used for the ABCS is the BMP280 barometric pressure and altitude sensor, which is the same one as the PLS. The primary reason for choosing this sensor, as opposed to the one used for avionics and recovery, is that the BMP280 outputs a numerical value for the altitude which is usable by a microcontroller for calculations. The Telemetrum, on the other hand, only logs the apogee and outputs it after the flight; this is not useful for an application that requires real-time data such as the ABCS. Also, the high accuracy of the BMP280 is crucial for all calculations. Errors in the air pressure measurement will affect the drag force calculations as well as the distance to apogee, so having an accurate sensor decreases the chance that either of those is incorrect by a large margin.

4.3.2.2.5 Actuation Mechanism Selection

After selecting the umbrella method with coupler, the team was faced with a decision as to how to actuate the aeroplates. Two mechanisms were considered for the actuation of the ABCS: a linkage-based mechanism that pushes upwards on the aeroplate through a linkage attached to a leadscrew, and a gear-based mechanism similar to a winged corkscrew, with a central worm gear interfacing with 3 separate worm wheels (one for each aeroplate). The linkage-based mechanism was chosen as the team did not believe that the gear based mechanism would be manufacturable given competition time constraints.

4.3.2.2.6 Driver Motor Selection

For the preliminary motor selection, two high-level options were considered. Initially, the team expected the ABCS to require substantial torque due to rough estimates of produced drag. To enable this, the team selected a high torque brushed DC gear motor. It was understood at the time that this choice would complicate the electrical system significantly, as a closed-loop PID would need to be developed to convert the purely velocity based brushed motor to a system capable of positional control. Recently, the team has constructed a digital numerical model that provides a relationship between the drag force of the airbrakes and the torque required by the driving motor and discovered that using the drag calculated as seen in the drag analysis section below, much less torque was needed for the system to function as intended.

Understanding these drastically reduced torque requirements, the team was able to weigh the control benefits of a stepper motor more over the torque benefits of a brushed DC. The team has selected a Stepper Online NEMA 17 stepper motor for the system as it provides a torque safety factor of 4 over the required torque, has a relatively flat torque curve, and provides easy positional control.

4.3.3 Selected ABCS System Design

4.3.3.1 ABCS Major Subsystems

4.3.3.1.1 Software Design

The selected control system will be a continuous, closed-loop control system that takes altitude, velocity, air pressure, and vehicle orientation as inputs and calculates the drag force needed for the vehicle to achieve an apogee as close as possible to the chosen target. Once this quantity is known, it will output the necessary motor commands to the mechanical system, which will then actuate and deliver said drag force. This control system offers key advantages over the other options, including greater accuracy and reliability. Such a system would be able to actively respond to the changing state of the vehicle and, if extensively tuned and refined, will allow the vehicle to autonomously control its altitude to a great degree. However, if further testing proves this method to be impractical or infeasible, the team will then employ a “checkpoint” system, which will decide at specific checkpoints in the flight whether to deploy the airbrakes and by how much.

All software will be programmed on and executed by the chosen microcontroller, a Teensy 4.0. With a clock speed of 600MHz, the Teensy should be able to process all sensor data in real-time and output a motor command within milliseconds. This ensures that the vehicle does not change altitude or speed excessively during calculation time, which would lead to inaccurate readings and less efficient control. The Teensy 4.0 is also relatively small compared to the

mechanical system, with dimensions of 1.4” by 0.7”, allowing for more freedom in its placement and the design of the ABCS. Overall, the size and speed of the Teensy 4.0 gives the team the ability to carry out performance heavy calculations without violating size or budget constraints.

4.3.3.1.2 Mechanical Design

4.3.3.1.2.1 *Airbrakes System Design*

The selected air brake system uses the umbrella method with a coupler. The umbrella style of deployment ensures that major system failure modes do not impact the rest of the rocket, while the addition of the coupler ensures that the system does not compromise the vehicle's structural integrity. The system also allows the team to increase or decrease the overall area of the aeroplates by lengthening them in design and reduces their retracted drag by enabling them to lie flush with the airframe when retracted. The system uses linkages attached to a slide plate, which has its vertical position controlled by a lead screw and stepper motor. The team has constructed a MATLAB simulation that uses a numerically solved implicit equation of state to determine the motor torque-drag relationship and the motor position-aeroplate angle relationship. The results from this simulation have been used to size the motor and will be used to create a motor control lookup table for use in the control system. The final mechanical system occupies 6.5” of length within the vehicle, with an additional 3” of length for electronics.

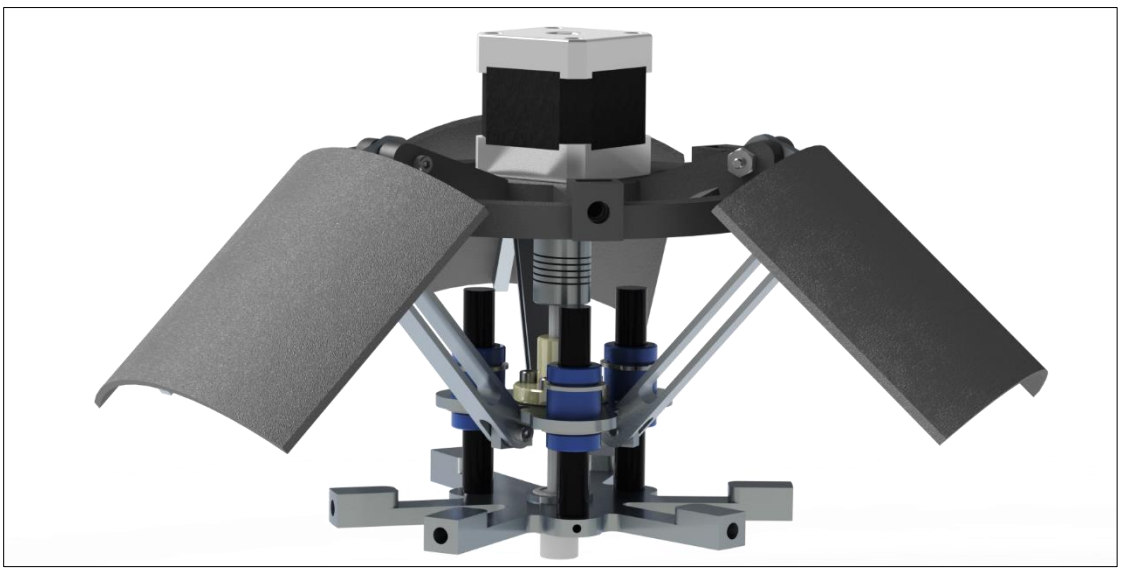

Figure 4.26: ABCS Mechanical Design System, Partially Deployed

4.3.3.1.2.2 *Hardware Selection*

Notable hardware features include the use of a 1.5mm pitch lead screw, linear motion shafts, leadscrew thrust bearings, plain bearings at all pivot points, and a flex coupler for load isolation. The lead screw provides the majority of support to the aeroplates, necessitating a stepped shaft and thrust bearing to ensure that loads are properly transferred to the lower bearing plate. To ensure that no axial load is transmitted to the stepper motor, a flex coupler isolates the motor. The system has been designed to minimize the length of the leadscrew due to its dense steel construction. Plain bearings are used for each pivot point to smooth out the motion of the actuation of the aeroplates. The vertical motion shafts ensure that horizontal loads from the aeroplates are not transmitted to the leadscrew.

4.3.3.1.2.3 *Drive Motor Selection*

A stepper motor was selected to provide precision position feedback, which will be crucial for a successful altitude control mechanism such as the ACBS. In addition to this factor, the stepper motor was chosen because a standard motor such as the NEMA 17 exceeds the predicted holding torque density requirements of the current system.

4.3.3.1.2.4 *Drag Analysis of Selected Design*

To calculate the drag on the ABCS, the general drag equation was used. Assuming that the ABCS is moving and is fully enclosed by a fluid, air in this case. The drag equation is as follows:

$$F_D = \frac{1}{2}\rho U^2 A C_D$$

Equation 4.1: General Drag Equation used to calculate drag force on one ABCS Plate

The variables needed to compute the force of drag are, the density of the fluid that the body is moving in (ρ), the Velocity of the body (U), the area of the body (A), and then the coefficient of drag on that particular body. The units used are in standard metric, meaning that the units for density are kilograms per meter cubed, velocity is measured in meters per second, Area in meters squared. The coefficient of drag is unitless, so the force of drag will be measured in kilogram meters per second squared which is equivalent to the units of Newtons (N). To calculate the drag force that the ABCS will endure we used the following as the values for the variables listed above. Based on the expected average altitude value of 3720 feet during the Airbrakes-enabled flight, the density of the air was computed to be approximately 1.093 kilograms per meter cubed. The average altitude was found by using MATLAB's Simulink program that the Avionics team uses. The expected velocity of the body to reach the average altitude, found by the use of open data and preliminary data of our rocket, is approximately 154.366 meters per second. The area for one of the three plates of the ABCS is measured to be 0.00965 meters squared. Then for the coefficient of drag value, the constant of 1.2 (based on textbook C_D for semicircular plates) is used because the team is still testing and calculating the drag coefficient values of different materials and possible future design changes for the plates in the ABCS. This value for the coefficient of drag is expected to change and is not yet final, but it is used to get a general idea of the drag force on one of the plates for the ABCS during flight. Substituting the above values of $\rho_{average}$ = 1.093 kilograms per meters cubed, U = 154.366 meters per second, A = 0.00965 meters squared, and C_D = 1.2 into equation 4.3.2.1:

$$F_D = \frac{1}{2}\rho U^2 A C_D = \frac{1}{2}(1.093\,\frac{kg}{m^3})(\,154.366\frac{m}{s})^2(0.00965\text{m}^2)(1.2)$$

Equation 4.2: General Drag Equation with substituted values to calculate drag force on one ABCS Plate

This then leads to an approximate drag force of **F_D = 150.8 N** for one of the plates in the ABCS. Since in our design, there are a total of three plates. To find the total drag force on the ABCS multiply 150.8 * 3. With this calculation, the approximate total drag force on the ABCS is equivalent to **$F_{D,\,Total}$ = 452.4 N**. This drag is used in the aforementioned motor sizing calculations.

4.3.3.2 **ABCS Subsystem Integration and Reliability**

4.3.3.2.1 Aerodynamic Design

The task of integrating the aerodynamic factors of the air brakes into the rest of the rocket includes three topics: sensors, static portholes, and stall mitigation. The ABCS control system will rely on multiple sensors to monitor the conditions outside of the rocket and return the proper signals to the microcontroller. These sensors have been chosen to fulfill the requirement to bring the rocket within 100ft of the predicted apogee. The static port hole size for the altimeter was calculated based upon the formulation derived in the paper and the related spreadsheet *HPR Research - Static Port Holes from Nescience to Science* by Gary Stroick which was developed for model rocketry. Accounting for the volume occupied by the motor in the air

The current design utilizes two sensors, an altimeter that measures geometric altitude and absolute pressure. This will require some alignment with the outer shell of the rocket body. The second sensor is a 9-axis IMU. These sensors must be connected to the dedicated ABCS circuit.

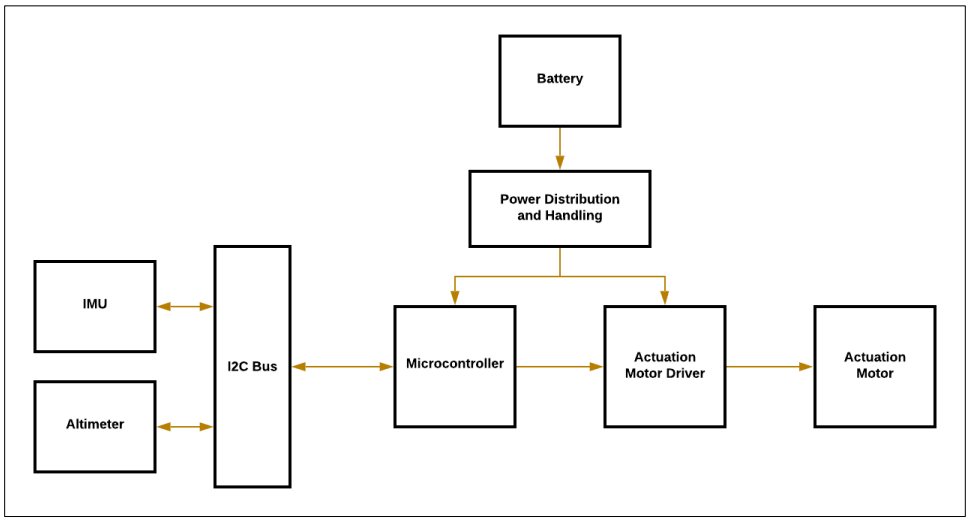

Figure 4.27: Airbrakes Control System Electrical Diagram

To ensure that the rocket refrains from stalling and to maintain the stability margin, the sensors inside the ABCS will alert the control system to a pressure drop and an angular velocity change at the first confirmed sign of stall or instability such as undesired torque. The current mitigation effort is to immediately close the ABCS.

4.3.3.2.2 Software Design

Integrating the software with the launch vehicle involves collecting and analyzing data from the altimeter which will be used in the drag force calculation. The sensors used internally to the system will be sensing for the conditions outside of the launch vehicle to be used to bring the launch vehicle within 100ft of the predicted apogee. By analyzing the data from the launch vehicle and its altitude, velocity, air pressure, and vehicle orientation, the onboard control system will determine the deployment of the ABCS. Should the data indicate that the launch vehicle cannot withstand the instability that the ABCS system would produce, the internal control system would not deploy the ABCS. Since the ABCS is not required by the competition standards, this software integration is critical to the safety of the other systems of the launch vehicle.

4.3.3.2.3 Mechanical Design

As the selected mechanical design will require parts of the vehicle's external surface to be cut and converted into plates, the airbrakes sub-team must work closely with the construction subteam to ensure that the manufacturing process goes smoothly. When integrating the ABCS, the vehicle's structural integrity must not be compromised by the addition of the mechanical system; this is the purpose of the internal coupler in the selected design. Even though some of the vehicle's surface will be deployed as drag plates during the flight, the coupler will ensure that the vehicle maintains structural rigidity and can properly resist stresses and shock forces. Also, as the ABCS sits directly next to the vehicle motor, steps should be taken to ensure that no failure mode of the ABCS will in any way damage or compromise the motor either during or after burnout. One of the project requirements is that the ABCS shall only operate after burnout, which is to prevent any such damage from occurring—also to avoid dangerous powered stall conditions. Finally, it is the responsibility of the airbrakes sub-team to prevent the mechanical system from putting the fins into said stall condition, which will be achieved through aerodynamic analysis, control system refinement, and event contingency plans.

4.3.4 ABCS Redundancy and Safety

4.3.4.1 **Redundancy**

The ABCS does not have any redundant systems because there was no redundancy in mechanical design that would enhance the overall safety of the launch vehicle. The space restrictions made it so that a redundant mechanical design would be more costly to the mission of the launch vehicle than the current design. Instead of redundancy, the system has been designed to enter a shutdown state at any sign of failure

4.3.4.2 **Safety**

As the ABCS is not required by the competition rules to be a part of the launch vehicle, its functionality is secondary to the other systems and the safety of said systems. In other words, if the ABCS fails during the flight, it must be pre-programmed to take all actions necessary to preserve the safety of the vehicle above all else. This can mean many things, including but not limited to choosing not to deploy the airbrakes plates even when necessary to achieve the desired apogee and actively shutting the airbrakes plates to avoid interference with the aerodynamics of the vehicle. Safety measures will be implemented in both the mechanical design and the software design processes to ensure that all predicted failure modes have been accounted for. Mechanical failures will be limited through flex couplers used to distribute load and prevent the lead screw from experiencing excessive stresses. If a mechanical failure does occur, the control system will immediately begin aborting, and steps will be taken to ensure that the flight can continue without the functionality of the airbrakes. An example of such a measure is to configure the ABCS in a manner where its undeployed state is the default configuration, meaning this will be the state of the ABCS in case of a power cut.

For software measures, the control system, through IMU data, will be able to monitor the angular velocity of the vehicle and act accordingly if any anomalies are detected in the vehicle's flight; this data will also be used to prevent the ABCS from deploying during the vehicle burn. Since the chosen IMU can output the angular velocity and acceleration of the vehicle along its primary axes, one safety protocol that will be implemented will be to monitor these quantities about the primary axes for any large perturbations before the initial actuation of the aeroplates. If this perturbation is above a certain threshold, the ABCS will not deploy. Furthermore, if any large disturbances are encountered during coast, e.g. the ABCS is inducing an unexpected tumble for the rocket, the ABCS will be designed to immediately deactivate. The exact numbers of the thresholds for the perturbations along the primary axes of the rocket will be set after determining the angular velocities along the primary axes that could put the rocket into a tumble. It is expected that the rocket will rotate along its roll axis in nominal flight. However, the perturbation thresholds will be placed on the pitch and yaw axes to ensure that deployment of the ABCS does not adversely impact the rocket orientation during the coast.

5 Safety

An integral part of mission success includes a thorough understanding of the hazards that the project will face. Threats to team personnel, the environment, the project, and the launch vehicle are all components of the overall risk associated with the mission. Throughout the design, construction, testing, and launch of the vehicle, risks are identified and minimized, but the team is aware that not every hazard can be foreseen nor mitigated. Acknowledgement of the known dangers to the project and a plan to minimize or eliminate these risks is the only way to maximize the safety of team, the safety of the project, and the success of the mission.

5.1 Hazard Analysis Methods

The seriousness of a risk will be evaluated by two criteria: the likelihood of an event to occur and the severity of the event should it happen or fail to be prevented. Categories of likelihoods and impacts are discussed below:

5.1.1 Likelihood of Event

Category	Value	Gauge
Remote	1	Extremely unlikely to occur
Unlikely	2	Unlikely to occur
Possible	3	Average odds to occur
Likely	4	Above-average likelihood to occur
Very Likely	5	Very likely to occur/has occurred previously

Table 5.1: Event Likelihood Scale

5.1.2 Severity of Event

Category	Value	Health and Personal Safety	Equipment	Environment	Flight Readiness
Negligible	A	Negligible injury. No first aid required. No recovery time needed.	Minimal and negligible damage to equipment or facility. No required correction.	Negligible damage. No repair or recovery needed.	No flight readiness disruption.
Minor	B	Minor injury. Requires band-aid or less to treat. 5-10 minutes of recovery time required.	Minor damage. Consumable equipment element requires repair.	Minor environmental impact. Damage is focused on a small area. Little to no repair or recovery needed. Outside assistance not required.	Flight proceeds with caution.
Moderate	C	Moderate injury. Gauze or wrapping required. Recovery time up to one day.	Reversible equipment failure. Non-consumable element requires repair. Outside assistance not required.	Reversible environmental damage. Personal injuries unlikely. Outside assistance recommended. Able to be contained within team.	Flight delayed until effects are reversed.

Major	D	Serious injury. Hospital visit required. No permanent loss of function to any body part.	Total machine failure. Outside assistance required to repair.	Serious but reversible environmental damage. Outside assistance required. Personal injuries possible.	Flight on hold until system is removed.
Disastrous	F	Life-threatening or debilitating injury. Immediate hospital visit required. Permanent deformation or loss of bodily function.	Irreversible failure. Total machine loss. New equipment required.	Serious irreversible environmental damage. Personal injuries likely. Immediate outside assistance required. Area must be vacated. Needs to be reported to a relevant environmental agency.	Flight scrubbed or completely destroyed.

Table 5.2: Event Severity Scale

5.1.3 Risk Analysis

By cross examining the likelihood of an event with the impact it would have if it occurred, a total risk can be determined and is detailed in the table below. The color code displayed is as follows:

- Green: Minimal risk
- Yellow: Low risk
- Orange: Medium risk
- Light red: High risk
- Dark red: Very high risk

		Severity				
		Negligible (A)	**Minor (B)**	**Moderate (C)**	**Major (D)**	**Disastrous (F)**
Likelihood	**Remote (1)**	A1	B1	C1	D1	F1
	Unlikely (2)	A2	B2	C2	D2	F2
	Possible (3)	A3	B3	C3	D3	F3
	Likely (4)	A4	B4	C4	D4	F4
	Very Likely (5)	A5	B5	C5	D5	F5

Table 5.3: Total Risk Scale

Prior to a plan for risk mitigation, many of the events listed in the following sections fall outside of the acceptable tolerance. Listed alongside these events are the team's risk mitigation plans, as well as verification metrics to ensure team compliance. Post-mitigation risk is also listed, ensuring all project risks are acceptable after mitigation.

5.2 Personnel Hazard Analysis

Hazard	Likelihood (Cause)	Severity (Effect)	Risk	Mitigation	Verification	Post Mitigation Risk
Burns from Motor	2 (Proximity to launch pad, touching engine too soon after landing)	C (Mild to moderate Burns)	C2, Low	Maintain minimum safe launch distances according to NAR standards. Wait an appropriate amount of time after launch to retrieve vehicle.	The Safety Team lead will ensure the minimum safe distance region is marked and communicated to team members at the launch.	C1, Low
Contact with Airborne Chemical Debris	3 (Airborne particulate debris generated from construction or testing operations)	B (Minor burns, abrasions)	B3, Low	Wear appropriate PPE such as gloves, lab coats and breath masks, wash with water.	Safety Team will verify that each participating member is wearing appropriate PPE at construction and testing operations.	B1, Minimal
Dehydration	3 (Failure to drink adequate amounts of water)	C (Exhaustion and possible hospitalization)	C3, Medium	Ensure all members have access to water at launch.	Mandatory water breaks will be held every hour where no work may be done during that period.	C1, Low
Direct Contact with Hazardous Chemicals	3 (Chemical spills, improper use of chemicals)	C (Moderate burns, abrasions)	C3, Medium	Minimize the need for hazardous chemicals (for example, see section 2.3.1, "Motor and Fin Support Structure"), wear appropriate PPE such as gloves or lab coats, wash with water.	Safety Team will verify that each participating member is wearing appropriate PPE at construction and testing operations.	C1, Low
Dust or Chemical Inhalation	3 (Airborne particulate debris from construction or testing operations)	C (Short to long-term respiratory damage)	C3, Medium	Wear appropriate PPE or respirator, work in a well-ventilated area.	Safety Team will verify that each participating member is wearing appropriate PPE at construction and testing operations.	C1, Low
Electrocution	2 (Improper use of equipment, static build-up on equipment or clothing)	D (Possible explosion, destruction of electrical tools or components, possible severe harm to personnel)	D2, Medium	Give labels to all high voltage equipment warning of their danger; ground oneself when working with high-voltage equipment.	Guarantee no open electrical components. Allow only one member to work on electrical components at a time with proper PPE and student supervising.	D1, Medium
Entanglement with Construction Machines	4 (Loose hair, clothing, or jewelry)	F (Severe injury, death)	F4, Very High	Secure loose hair, clothing, and jewelry; wear appropriate PPE.	All use of construction machines will be done under the supervision of a person/people also trained on that specific machine.	F1, Medium
Epoxy Contact	3 (Resin spill, improper use of resin)	C (Mild skin irritation, possible allergic reaction, redness and rashes on skin)	C3, Medium	Minimize the need for hazardous chemicals (for example, see section 2.3.1, "Motor and Fin Support Structure"),	Team Leads must ensure all members working with hazardous chemicals are wearing proper PPE and are working in a safe environment.	C1, Low

				wear appropriate PPE such as gloves or lab coats, wash with water.		
Eye Irritation	3 (Airborne particulate debris, dry air)	B (Temporary eye irritation)	B3, Low	Wear appropriate PPE or protective eyewear, wash with water.	Team Leads must ensure PPE worn is at all times during manufacturing.	B1, Minimal
Heatstroke	3 (Extended exposure to high temperatures when working outside or on launch days)	D (Exhaustion, possible hospitalization)	D3, Medium	Wear clothing appropriate to the weather, ensure all members have access to water at launch.	Team members must have adequate clothing, Safety Team will report violators to the project lead to decide if the violator should be dismissed to a colder area; water will be provided.	D1, Medium
Hearing Damage	4 (Close proximity to loud noises)	D (Long term hearing loss)	D4, High	Wear appropriate PPE such as earplugs when using power tools.	Team Leads must ensure PPE worn is at all times during construction.	D1, Medium
Hypothermia	3 (Low temperatures when working outside or on launch days)	C (Sickness and possible hospitalization)	C3, Medium	Wear clothing appropriate to the weather, ensure all members have access to a warm area to rest at launch. Minimize work time in cold areas.	Team members must have adequate clothing, Safety Team will report violators to the project lead to decide if the violator should be dismissed to a warmer area.	C1, Medium
Kinetic Damage to Personnel	2 (Failure to take appropriate care around unburned fuel, post-landing launch vehicle explosion)	D (Possible severe kinetic damage to personnel)	D2, Medium	Extinguish any fires before recovering, wait for motors to burn fully before recovering, wear appropriate PPE when recovering.	Project Management must ensure the area is evacuated and designated individuals are to recover components at a designated time when determined to be safe; no contact allowed without call out before use to make sure PPE worn.	D1, Medium
Launch Pad Fire	2 (Completion of fire triangle on launch pad)	C (Moderate burns)	C2, Low	Have fire suppression systems nearby and use a protective ground tarp.	Make sure the area is evacuated and designated individuals are to recover components at a designated time when determined to be safe; no contact allowed without call out before use to make sure PPE worn.	C1, Medium
Injury from Ballistic Trajectory	3 (Recovery system failure, lack of awareness of vehicle descent)	F (Severe injury, death)	F3, High	Keep all eyes on the launch vehicle and call “heads up” if needed. Limit number of people at launch.	Team will be briefed on launch day procedures before the launch occurs. Emphasize importance of keeping eyes on the launch vehicle during flight.	F1, Medium
Injury from Falling Components	3 (Failure to keep all components securely attached to the launch vehicle; result of improper staging constraints, part	F (Severe injury, death)	F3, High	Keep eyes on the launch vehicle at all times; make sure all team members who cannot watch the launch vehicle have spotters nearby; alert others if	Team will be briefed on launch day procedures before the launch occurs. Emphasize importance of keeping eyes on the launch vehicle during flight.	F1, Medium

	failure, or excessive vibration)			the launch vehicle enters a ballistic trajectory.		
Injury from Navigating Difficult Terrain	2 (Uneven ground, poisonous plants, fast-moving water)	F (Broken bones, infections, drowning, etc.)	F2, High	Do not attempt to recover the launch vehicle from dangerous areas.	Set boundaries to not cross at the launch location before the launch occurs.	F1, Medium
Injury from Projectiles Launched by Vehicle Jet blast	2 (Failure to properly clear launchpad, failure to stand an appropriate distance from the launch vehicle during launch)	C (Moderate injury to personnel)	C2, Low	Clean the launchpad before use, ensure all members are wearing proper PPE for launch, ensure all team members are an appropriate distance from the launch vehicle when launching.	Verify that the launchpad is clean and clear of debris before launch occurs. Create launch checklist to be completed before the launch vehicle can be launched.	C1, Low
Physical Contact with Hot Sources	3 (Contact with launch vehicle parts which were recently worked with, improper use of soldering iron or other construction tools)	C (Moderate to severe burns)	C3, Medium	Wear appropriate PPE, turn off all construction tools when not in use, be aware of the safety hazards of equipment in use.	Confirm that appropriate PPE is being used. Make sure that everybody is informed of the hazard.	C1, Low
Physical Contact with Falling Construction Tools or Materials	3 (Materials which were not returned to a safe location after use)	D (Bruising, cuts, lacerations, possible severe physical injury)	D3, High	Brief personnel on proper clean-up procedures, wear shoes that cover the toes.	Clean workspace every time after use. Create a checklist of where to put items after use.	D1, Medium
Premature Ignition	2 (Short circuit, improper installation of motor and/or ignitors)	C (Mild burns)	C2, Low	Prepare energetic devices only immediately prior to flight.	Place previously used materials in separate container than the unused materials.	C1, Low
Power Lines	2 (Launch vehicle becomes entangled in power lines, knocking them within range of personnel)	F (Fatal electrocution)	F2, High	Call the power company and stand clear until proper personnel arrive.	Alert all team members of the hazard. Everybody is required to stand clear of the area until certified personal clean up and verify that the area is safe.	F1, Medium
Power Tool Cuts, Lacerations, and Injuries	3 (Carelessness, improper use of power tools, power tool malfunction or failure)	D (Possible hospitalization)	D3, Medium	Secure loose hair, clothing, and jewelry; wear appropriate PPE; brief personnel on proper construction procedures.	No contact allowed without call out before use to make sure PPE worn. Make sure rules followed as set forth by machining rules.	D1, Medium
Tripping Hazards	3 (Improper storage of materials and equipment, unsecured cables overhead and along the ground)	C (Bruising, abrasions, possible severe harm if tripping into construction equipment)	C3, Medium	Brief personnel on proper clean-up procedures, tape loose cords or wires to the ground if they must cross a path which is used by personnel.	Have a cleanup sheet for workspace occupants to confirm everything is placed where it should be.	C1, Low
Unintended Black Powder Ignition	3 (Accidental exposure to flame or sufficient electric charge near black powder)	F (Possible severe hearing damage or other personal injury)	F3, High	Label containers storing black powder, ensure black powder	Have check in/out form to confirm only those permitted to handle	F1, Medium

				is only handled by those with relevant safety training.	materials are the only ones handling the material.	
Workplace Fire	2 (Unplanned ignition of flammable substance, overheated workplace, improper use or supervision of heating elements, or improper wiring)	F (Severe burns, loss of workspace, irreversible damage to project)	F2, High	Have fire suppression systems nearby, prohibit open flames, and store energetic devices in Type 4 magazines as stated in the CFR, Title 27.	Make sure all members are updated on the workplace fire safety protocols. Have lists of all required fire suppression system accounted for and found near the area of work.	F1, Medium

Table 5.4: Personnel Hazard Analysis

5.3 Vehicle Failure Modes and Effects Analysis

Hazard	Likelihood (Cause)	Severity (Effect)	Risk	Mitigation	Verification	Post Mitigation Risk
Airframe Failure	1 (Buckling or shearing of the airframe from poor construction or use of improper materials, faulty stress modeling)	F (Partial or total destruction of vehicle, ballistic trajectory)	F1, Medium	Use appropriate materials according to extensive mathematical and physical analyses of the body tube, bulkheads, fasteners, and shear pins, make use of reliable building techniques, confirm analyses with test launches.	Use a construction checklist which ensures mathematical analyses match physical analyses, if the airframe does not perform well in test launches, perform another test launch with a new airframe design before confirming flight readiness, and use checklists both before and after launch to ensure that the airframe is in good condition.	F1, Medium
Failure to Ignite Motor	2 (Lack of ignitor continuity)	A (Recycle launch pad)	A2, Minimal	Check for continuity prior to attempted launch.	Include checking for continuity in launch checklist that is to be completed prior to launch.	A1, Minimal
Motor Detonation	1 (Motor defect, assembly error)	F (Partial or total destruction of vehicle)	F1, Medium	Inspect motor prior to assembly and closely follow assembly instructions.	Include motor inspection in pre-launch checklist to verify this task is completed.	F1, Medium
Instability	1 (Stability margin of less than 1.00)	F (Potentially dangerous flight path, loss of vehicle)	F1, Medium	Measure physical center of gravity and compare to calculated center of pressure.	Have measured physical center of gravity documented and compared prior to arriving at the launch site.	F1, Medium

Motor Expulsion	2 (Improper retention methods)	F (Risk of recovery failure, low apogee, failing debris)	F2, High	Use positive retention method to secure motor.	Include motor securement into pre-launch checklist to verify that this task is complete.	F1, Medium
Premature Ejection	2 (Altimeter programming, poor venting)	F (Zippering, potential loss of vehicle components)	F2, High	Check altimeter settings prior to flight and use appropriate vent holes. Test altimeter in similar conditions to those to be experienced at launch.	Include checking altimeter settings to pre-launch checklist to verify that this task is complete.	F1, Medium
Loss or Damage of Fins	2 (Poor construction or improper materials used)	F (Partial or total destruction of vehicle)	F2, High	Ensure proper analysis has been completed on the thrust structure (see section 2.3.1.2, "Overall Design").	Conduct stress tests on fins to make sure they can withstand all forces present during flight.	F1, Medium
Destruction of Nose Cone	2 (Poor construction or improper materials used)	F (Partial or total destruction of vehicle)	F2, High	Use materials and building techniques appropriate to high-power rocketry.	Ensure that nose cone is secured well before ejection during test runs, otherwise alter.	F1, Medium
Loss of Parachute	3 (Poor construction or improper materials used)	F (Partial or total destruction of vehicle)	F3, High	Use materials and building techniques appropriate to high-power rocketry.	Ensure that parachute is secured well before ejection during test runs, otherwise alter to lower speed.	F1, Medium
Ejection Charge Failure	3 (Not enough power, electrical failure, improper charge sizing)	F (Ballistic trajectory, destruction of vehicle)	F3, High	Ground test charge sizes at least once before flight.	Conduct voltage test readings on power source before launch to make sure appropriate power is present for launch.	F1, Medium
Altimeter Failure	3 (Loss of connection or improper programming)	F (Ballistic trajectory, destruction of vehicle)	F3, High	Secure all components to their mounts and check settings prior to launch.	Include checking component securements to pre-launch checklist to verify that this task is complete.	F1, Medium
Payload Failure	3 (Electrical failure, program errors, dead battery)	D (Disqualified, objectives not met)	D3, Medium	Test payload prior to flight, check batteries and connections.	Keep fresh batteries separate from previously used batteries. Use fresh batteries for each launch.	D1, Medium

Heat Damaged Recovery System	2 (Insufficient protection from ejection charge)	F (Parachute damage, excessive landing velocity, potentially ballistic trajectory)	F2, High	Use appropriate protection methods, such as Kevlar blankets.	Check that proper protection methods are installed before launch.	F1, Medium
Broken Fastener	1 (Excessive force)	F (Ballistic trajectory)	F1, Medium	Use fasteners with a breaking strength safety factor of 2.	Perform stress test research on fasteners to confirm that they meet force requirements.	F1, Medium
Joint Failure	2 (Excessive force, poor construction)	F (Partial or total destruction of vehicle, ballistic trajectory)	F2, High	Use appropriate joint design according to extensive mathematical and physical flight analyses, make use of reliable building techniques, confirm analyses with test launches.	Ensure by design and testing that secure.	F1, Medium
Thrust Structure Failure	2 (Excessive force from motor, poor construction)	F (Partial or total destruction of vehicle, ballistic trajectory)	F2, High	Design thrust structure according to extensive mathematical and physical flight analyses, make use of reliable building techniques, confirm analyses with test launches.	Thrust structure design will be subject to testing and analysis before launch and performance analysis after launches.	F1, Medium
Battery Overcharge	3 (Unsupervised/undocumented charge)	C (Destruction of battery)	C3, Medium	Ensure batteries are documented and supervised if charging.	Reminders will be set by testing personnel to track battery charging tests.	C1, Low
Premature Black Powder Ignition	2 (Accidental exposure to flame or sufficient electric charge)	F (Partial destruction of vehicle, premature stage separation)	F2, High	Ensure design has sufficient distance/ protection from outside, and motor, charges, and batteries.	Ensure by design and testing that secure from other systems or puncture.	F1, Medium
Destruction of Bulkheads	2 (Poor construction or improper bulkheads chosen which cannot withstand launch forces, faulty stress modeling)	F (Partial or total destruction of vehicle, ballistic trajectory)	F2, High	Use appropriate materials according to extensive high-stress mathematical and physical analyses, make use of reliable building techniques, run stability tests, confirm analyses with test launches.	Bulkhead forces will be simulated during the design process. Bulkheads will be visually inspected prior to launch.	F1, Medium

Damaged Nose Cone	2 (Poor construction, damage from previous flights, poor storage, or transportation)	C (Lower launch vehicle stability, possible deviations from flight path)	C2, Low	Check the nose cone for damage before and after each launch, construct a nose cone which is strong enough to withstand launch forces, confirm choice of nose cone with subscale launches (see section 2.3.4, “Nose Cone”).	Nose cones will be inspected and repaired before and after each launch in order to make sure they are up to launch standards.	C1, Low
Motor Angled Incorrectly	2 (Poor construction, damage from previous flights, poor storage or transportation)	D (Lower launch vehicle stability, launch vehicle does not follow desired flight path)	D2, Medium	Ensure proper measurements and alignments are made during construction, ensure there is no rush to attach the motor tube. Implement checklists to ensure proper constraint and alignment of the motor within the thrust structure	Measurements will be made at rotational points around the motor tube to ensure equal distance from edge to launch vehicle edge coupling.	D1, Low
Premature Stage Separation	3 (Premature ejection, poor choice of shear pins or fasteners)	F (Possible recovery failure and damage to or loss of vehicle, ballistic trajectory)	F3, High	Check altimeter settings prior to flight, use appropriate vent holes, run thorough analyses to determine which types of shear pins and fasteners should be used.	Redundant altimeter will be used, calibration will be checked and verified by separate individuals.	F1, Medium
Premature Payload Deployment	2 (Fault sensor readings, hardware failure)	C (Failure to complete payload mission)	C2, Low	Follow strict quality standards for flight software, ensure failure modes do not endanger other subsystems.	Ground test payload in flight like conditions, inspect software before use, monitor payload during VDF.	C1, Low
Forgotten or Lost Components	3 (Carelessness with launch vehicle components, failure to take note of inventory before attempting to launch)	D (Launch vehicle does not launch at the desired launch time)	D3, Medium	Have spares for components which are small and easy to lose, have an inventory of all launch vehicle parts to be checked before moving the launch vehicle to a launch site.	Make sure not to forget anything. Have a team of 2 members go through and double check that everything has been taken and is accounted for.	D1, Medium
Launch Vehicle Disconnects from Launch Rail	2 (High wind speeds, failure to properly use the rail buttons, faulty rail buttons)	F (Partial or total destruction of vehicle, ballistic trajectory which endangers personnel, onlookers,	F2, High	Use mathematical and physical analyses to ensure the rail buttons are properly aligned and working as planned, double check the rail buttons are properly attaching the launch vehicle to the launch pad	Rail buttons will be inspected by two separate individuals prior to launch for cracks, misalignment, or other inaccuracies.	F1, Medium

		and property on the ground)		before launch, test rail buttons with subscale flights.		
Flight Path Interference	2 (Wildlife in the air, unforeseen obstacles such as a loose balloon)	F (Minor to severe change in the vehicle's flightpath, possible ballistic trajectory)	F2, High	Ensure there are clear skies above before launching, ensure an FAA waiver has been obtained for the designated launch area. Hold launch until flight path is clear.	Visual inspection of the surrounding area to make sure no incoming wildlife or loose objects.	F1, Medium
High Launch Rail Friction	3 (Faulty installation of rail buttons, faulty setup of launch rail, faulty installation of launch vehicle on launch rail, failure to properly lubricate launch rail as needed, weather conditions cause excess friction)	B (Launch vehicle does not follow the designated flight path well, lower maximum height, failure to leave pad)	B3, Low	Set up the rail using instructions which come with the product, use lubrication on the rail as needed according to weather and rail type, ensure the launch vehicle is properly installed on the launch rail.	Launch rails will be tested by tactile inspection to insure proper lubrication.	B1, Minimal
Failure to Ignite Propellant	2 (Faulty motor preparation, poor quality of propellant, faulty igniter, faulty igniter power source, damage to motor)	F (Launch vehicle does not immediately launch and is a considerable hazard until it is confirmed that it will not launch, changes to igniters or launch vehicle required)	F2, High	Purchase propellant and motors only from reliable sources, team mentor will be watched by team members during assembly, determine if the igniters chosen work well during subscale testing.	Make sure igniters are well tested and are extremely reliable.	F1, Medium
Propellant Fails to Burn for Desired Duration	2 (Faulty motor preparation, poor quality of propellant, damage to motor)	C (Launch vehicle does not follow the designated flight path well, lower maximum height, if drastic change in maximum height the ejection charges for recovery may not deploy)	C2, Low	Purchase propellant and motors only from reliable sources, check the motor for damage prior to launching, team mentor will be watched by team members during assembly.	Team member will be designated to observe the motor preparation procedure, only approved propellant sources will be used.	C1, Low
Propellant Explosion	1 (Faulty motor preparation, poor quality of propellant, damage to motor)	F (Ballistic trajectory, catastrophic destruction of	F1, Medium	Purchase propellant and motors only from reliable sources, check the motor for damage prior to launching, team mentor will be	Team member will be designated to observe the motor preparation procedure,	F1, Medium

		vehicle, possible harm to bystanders)		watched by team members during assembly.	only approved propellant sources will be used.	
Payload Computer Failure	3 (Electrical failure, program error, poor setup of wiring causes a connection to come undone, forgotten connection, battery failure)	F (Disqualified, objectives not met, loss of electronic control)	F3, High	Test payload prior to flight, check batteries and connections before flight.	Ensure by design and testing that components will not fail under extreme stress.	F1, Medium
Power Loss to Avionics Bay and/or Payload	3 (Faulty wiring, battery failure, poor setup of wiring causes a connection to come undone, forgotten connection)	F (Disqualified, objectives not met, failure to correctly trigger ejection charges)	F3, High	Test the reliability of the wiring and batteries through subscale flights, check batteries and connections before flight.	Continuity checks will be used, visible wires will be inspected for nicks or damage prior to launch.	F1, Medium
Avionics Bay Fire	2 (Faulty wiring, battery failure, poor setup of wiring, adverse weather)	F (May be disqualified if objectives are not met, possible failure to trigger ejection charges, damage to internal launch vehicle components)	F2, High	Thermal protection of avionics bay, do not overload avionics bay with wiring, only purchase avionics and payload equipment from reliable sources, check avionics bay and payload performance with test launches.	Ensure no wires are exposed and that the avionics bay is sufficiently protected from heat.	F1, Medium
Human Error When Arming Avionics and Payload	3 (Forgotten connection, forgetting to activate avionics bay components or payload prior to launch)	F (Disqualified, objectives not met, failure to correctly trigger ejection charges)	F3, High	Follow rigorous launch checklists.	All designated launch procedure observers will inspect avionics for charge and activation.	F1, Medium
Arming System Failure	3 (Faulty arming system, faulty wiring, battery failure, poor setup of wiring causes a connection to come undone, forgotten connection)	F (Disqualified, objectives not met, failure to correctly trigger ejection charges)	F3, High	Ensure the avionics bay is successfully communicating with the team prior to flight, test arming system through test launches.	Ensure by design and testing that communication between components is established and reliable.	F1, Medium
Stages Fail to Separate	3 (Faulty ejection charge, excessive strength is used to hold stages together, altimeter failure)	F (Launch vehicle does not follow desired flight path, possible ballistic trajectory, lower maximum height,	F3, High	Any team member who loads the ejection charges must be supervised by at least one other team member, examine ejection charges for damage before launch, ensure proper functionality of the altimeters, ejection charges, and	Ejection charge testing will be performed to ensure charges can separate stages, dual altimeters will be employed to enable redundancy.	F1, Medium

		damage to the launch vehicle)		interstage joints and fasteners through test flights and mathematical and physical analyses, have a secondary ejection charge for each stage separation.		
Main Parachute Fails to Deploy	2 (Poor design of where parachute is in launch vehicle, poor sealing of parachute chamber, poor loading of parachute, faulty parachute or ejection charge, altimeter failure)	F (Main parachute does not slow down the launch vehicle, recovery failure, ballistic trajectory)	F2, High	Any team member who seals or packs the parachute chamber must be supervised by at least one other team member, examine parachute and ejection charges for damage before launch, run mathematical and physical analyses as well as subscale tests to ensure parachute is in the right position in the launch vehicle, have a secondary ejection charge in case of emergency which is larger than the first.	Ejection charge testing will be done to ensure charge effectively deploys parachute.	F1, Medium
Drogue Parachute Fails to Deploy	2 (Poor design of where parachute is in launch vehicle, poor sealing of parachute chamber, poor loading of parachute, faulty parachute or ejection charge, altimeter failure)	F (Drogue parachute does not slow down the launch vehicle, recovery failure, ballistic trajectory)	F2, High	Any team member who seals or packs the parachute chamber must be supervised by at least one other team member, examine parachute and ejection charges for damage before launch, run mathematical and physical analyses as well as subscale tests to ensure parachute is in the right position in the launch vehicle, have a secondary ejection charge in case of emergency which is larger than the first.	Double check that packing of the drogue parachute to ensure that it reliably deploys.	F1, Medium
Parachute Canopy Breaks or Tears	1 (Poor canopy materials, improper ejection of recovery system, damage from previous flights or transportation)	F (Possible recovery failure, ballistic trajectory)	F1, Medium	Only buy parachutes from reliable sources, remove threats to parachute integrity from the parachute housing, test the recovery system through mathematical and physical	Run simulations and mathematical analysis to ensure the acquired parachute is capable of withstanding	F1, Medium

				analyses as well as subscale flights, check the recovery system for damage before launch.	forces to safely descend the launch vehicle.	
Parachute Shroud Lines Break	1 (Poor shroud line materials, improper ejection of recovery system, damage from previous flights or transportation)	F (Possible recovery failure, ballistic trajectory)	F1, Medium	Only buy parachutes from reliable sources, remove threats to parachute integrity from the parachute housing, test the recovery system through mathematical and physical analyses as well as subscale flights, check the recovery system for damage before launch.	Ensure by design and testing that the shroud lines are strong enough to handle expected forces.	F1, Medium
Shock Cord Breaks or Disconnects	1 (Faulty shock cord, damage to shock cord, poor connection to the launch vehicle)	F (Parachute disconnect from the launch vehicle, recovery failure, ballistic trajectory)	F1, Medium	Any team member who connects the shock cord to the launch vehicle must be supervised by at least one other team member, check the shock cord for damage before and after flight, only buy shock cords from reliable sources, analyze the shock cord with test flights.	Test the shock cord to ensure it can withstand the forces acting upon it during descent.	F1, Medium
Tangled Parachute or Shock Cord	2 (Faulty or damaged shock cord or parachute, poor packing of shock cord and/or parachutes, poor sizing of parachutes or shock cord, unstable or ballistic flight)	F (Shock cord or parachutes may not fully achieve their goal, possible ballistic trajectory, possible failed recovery)	F2, High	Only buy parachutes and shock cords from reliable sources, any team member who seals or packs the parachute chamber must be supervised by at least one other team member, examine parachutes and shock cord for damage before launch, check performance of parachutes and shock cord in test flights, appropriately follow recommended sizings for shock cord and parachutes.	Designated parachute packing observer will record the packing and make notes on operation and have right to demand repacking.	F1, Medium
Parachute Comes Loose	2 (Failure of recovery system mount on the launch vehicle body, poor shroud line materials, improper ejection of	F (Recovery failure, ballistic trajectory)	F2, High	Only buy parachutes from reliable sources, test the recovery system through mathematical and	Ensure by design and testing that the parachute is attached well.	F1, Medium

from Launch Vehicle	recovery system, damage from previous flights or transportation)			physical analyses as well as subscale flights, check the recovery system for damage before launch, double check that the recovery system is properly mounted before launch.		
Parachute or Shock Cord Catch Fire	2 (Not enough space given between ejection charge and parachute, poor insulation of parachute, poor parachute packing, faulty or poorly chosen ejection charge)	F (Shock cord or parachutes do not fully achieve their goal, possible ballistic trajectory, possible failed recovery, damage to internal launch vehicle components)	F2, High	Any team member who packs the parachute or ejection charges must be supervised by at least one other team member, use recommended sizing methods for ejection charges, confirm proper placement and packing methods of ejection charges and parachutes with test flights.	Designated packing operation observer will document packing process to insure proper placement.	F1, Medium
Destruction of Vehicle Due to Drag Forces	1 (Poor construction or improper materials used)	F (Partial or total destruction of vehicle)	F1, Medium	Use appropriate materials and high-powered building techniques. Include fail safes in systems which modify the drag forces on the vehicle.	Use subscale avionics data to ensure drag forces will be within vehicle limits.	F1, Medium
ABCS Failure to Deploy	3 (Software error, mechanism failure)	B (Improper final vehicle altitude)	B3, Low	Design software and mechanism according to expected flight conditions.	Monitor ABCS performance during VDF.	B2, Low
ABCS Loss of Control	3 (Software error, mechanism failure)	F (Partial or complete destruction of vehicle)	F3, High	Design software and mechanism according to expected flight conditions. Ensure system enters low drag state during all failure modes.	Perform ground testing of various failure modes. Monitor ABCS performance during VDF.	D1, Medium
Airframe Zippering	2 (Excessive deployment deceleration)	F (Partial or complete destruction of vehicle)	F2, High	Properly time ejection charges and use an appropriately long tether. Add slide ring to main parachute to reduce deployment shock.	Ensure design of vehicle and thrust structure are sound, test and observe vehicle at full scale launch prior to Huntsville.	F1, Medium
GPS Lock Failure	2 (Interference or dead battery)	F (Loss of vehicle)	F2, High	Ensure proper GPS lock and battery charge before flight.	Check battery charge before flight to ensure it is capable of providing power during the duration of flight.	F1, Medium

Insufficient Landing Speed	3 (Improper load, higher coefficient of drag for the parachutes than needed, higher surface area of the parachutes than needed)	B (Unexpected changes in flightpath and landing area, increased potential for drift)	B3, Low	Use subscale flights to determine if the subscale parachutes were accurately sized, use recommended and proven-to-work parachute sizing techniques.	Dual simulations will validate theoretical parachute performance.	B1, Minimal
Excessive Landing Speed	3 (Parachute damage or entanglement, improper load)	F (Partial or total destruction of vehicle)	F3, High	Properly size, pack, and protect parachute.	Dual simulations will validate theoretical parachute performance.	F1, Medium
Battery Leakage/ Ignition	2 (Battery compartment becomes punctured)	F (Potential for ballistic trajectory)	F2, High	Check battery integrity before each launch.	Include checking battery condition in pre-launch checklist.	F1, Medium

Table 5.5: Vehicle Failure Modes Effect Analysis

5.4 Environmental Concerns Analysis

Hazard	**Likelihood (Cause)**	**Severity (Effect)**	**Risk**	**Mitigation**	**Verification**	**Post Mitigation Risk**
Landscape	3 (Trees, brush, water, power lines, wildlife)	F (Inability to recover launch vehicle)	F3, High	Angle launch vehicle into wind as necessary to reduce drift.	Inspect launch site before launch to verify that it is a suitable area to launch.	F1, Medium
Humidity	3 (Climate, poor forecast)	A (Rust on metallic components, failure of electronics components)	A3, Low	Use as little ferrous metal as possible in vehicle design, conformal coat critical electronics components, store vehicle indoors when not in use.	Check weather beforehand for ideal launch time.	A1, Minimal
Winds	3 (Poor forecast)	D (Inability to launch, excessive drift)	D3, Medium	Angle into wind as necessary, abort launch if wind exceeds 15 mph.	Check weather beforehand for ideal launch time.	D1, Medium
High Temperature	3 (Poor forecast)	C (Heat related injury or damage to vehicle components)	C3, Medium	Keep launch vehicle in shaded area until before launch.	Check weather beforehand for ideal launch time.	C1, Low
Low Temperatures	3 (Poor forecast)	C (Cold-related personnel injuries, frost on ground, ice on vehicle, clogging of vehicle ventilation, change in launch vehicle rigidity and mass, higher drag force on launch vehicle)	C3, Medium	Ensure team is wearing appropriate clothing for extended periods of time in cold environments, keep the launch vehicle at room temperature or bundled in materials which hold in heat, if ice appears anywhere on the launch vehicle, do not launch and return it to a warm location.	Ensure team is notified of weather on day of launch or manufacturing to wear proper clothing, do not launch if weather is below designed intent of launch vehicle; ensure mitigation is strictly followed due to weather notification.	C1, Low
Pollution from Exhaust	5 (Combustion of APCP motors)	A (Small amounts of greenhouse gasses emitted)	A5, Medium	Use only launch vehicle motors approved for use by the National	Launch vehicle motors in consideration will be checked by a	A5, Medium

				Association of launch vehicle, Canadian Association of launch vehicle, or Tripoli Rocketry Association.	safety team member to ensure compliance.	
Pollution from Vehicle	2 (Loss of components from vehicle)	C (Materials degrade extremely slowly, possible harm to wildlife or water contamination)	C2, Low	Properly fasten all components. Scavenge for fallen parts after launch is completed.	Inspect the securements of components before launch. Have designated clean up team for each launch.	C1, Low
Pollution from Team Members	2 (Failed disposal of litter, improper cleanup procedures, members walk through important plant life, farming fields, sod, etc.)	D (Litter may degrade extremely slowly, wildlife may consume harmful litter)	D2, Medium	Brief team members on proper cleanup procedures, foster a mindset of leaving no trace at launch sites, only the minimum number of required team members should retrieve the launch vehicle.	Follow societal standards and leave cite cleaner than was found, make sure disposable equipment is kept track of and guaranteed to remain at designated locations, not with retrieval.	D1, Medium
Collisions with Man-made Structures or with Humans	2 (Failure to properly predict trajectory, failure to choose an appropriate launch area)	F (Damage to public property or private property not owned by the team, damage to team equipment, serious damage to team personnel or passerby)	F2, High	Do not launch under adverse conditions which may affect the course of the launch vehicle, run a large number of tests which analyze the launch vehicle's trajectory mathematically and physically, choose a launch area which is not close to civilization, follow launch procedures closely.	Run tests to analyze and estimate the launch vehicle's trajectory so that the launch vehicle's path is known to the team; do not launch vehicle under adverse weather conditions and choose a launch location which allows for open space to avoid accidents.	F1, Medium
Wildlife Contact with Launch Vehicle	1 (Failure to accurately predict trajectory, unexpected appearance of wildlife, poor choice of launch area)	D (Damage to vehicle components, damage to wildlife, unexpected trajectory close to the ground)	D1, Medium	Launch in an open area with high visibility, be aware of the surroundings when choosing a launch area and launching.	Ensure that the launch area is in a safe area where surroundings do not stand in the way of the launch or have a chance of getting damaged.	D1, Medium
Wildlife Contact with Launch Pad	1 (Failure to monitor the launch pad, poor choice of launch area)	D (Possible inability to launch the launch vehicle, unpredictable launch behavior or trajectory)	D1, Medium	Have at least one team member monitoring the launch pad at all times, launch in an open area with high visibility, be aware of the surroundings when choosing a launch area and launching, if animals tamper with the launchpad, do not launch.	Ensure that the launch pad is in a safe area where surroundings do not stand in the way of the launch pad or have a chance of getting damaged by the launch.	D1, Medium
Battery Leakage	3 (Absence of or damage to battery casing causing puncture)	C (Possible toxic acid leak, heavy metal contamination)	C3, Medium	Batteries will be individually enclosed in plastic casing, parachutes will be selected to reduce landing kinetic energy below levels that will damage the casing.	Inspect battery casing prior to launch to ensure the battery is properly protected and unlikely to become punctured.	C1, Low

Fire to Surroundings	3 (Exhaust caused by launch vehicle engine)	F (Possible spread of wildfire, damage to wildlife or landscape)	F3, High	Ground will be cleared per NAR standard, fire extinguishers will be on hand, flame retardant tarp will be deployed to prevent catching of fire.	Inspection by safety officer will be performed to ensure compliance with NAR safety standard on minimum clear area.	F1, Medium
Kinetic Damage to Buildings	2 (Launch vehicle veers off trajectory causing landing in occupied area)	D (Repairable destruction to building)	D2, Medium	Choose launch site that is remote enough to make this risk negligible.	Ensure minimum distance from building exceeds minimum personnel distance as established by NAR safety standard.	D1, Medium
Kinetic Damage to Terrain	4 (Launch vehicle has excessive landing speed)	A (Creation of small ground divots, mild inconvenience to wildlife and flora)	A4, Medium	Simulate landing conditions to ensure parachute generates sufficient drag to slow launch vehicle to acceptable parameters	Dual simulations will be performed to ensure proper parachute performance.	A1, Minimal

Table 5.6: Environmental Hazards Analysis

5.5 Project Risk Analysis

Hazard	Likelihood (Cause)	Severity (Effect)	Risk	Mitigation	Verification	Post Mitigation Risk
Improper Funding	3 (Lack of revenue)	F (Inability to purchase parts)	F3, High	Create and execute a detailed funding plan properly, minimize excessive spending by having multiple members check the necessity of purchases.	Have each team verify purchases with team lead to ensure the team is still within their given budget. Program's treasurer and Business Lead will work to create a uniform document for member purchases.	F1, Medium
Failure to Receive Parts	2 (Shipping delays, out of stock orders)	F (Cannot construct and fly vehicle)	F2, High	Order parts while in stock well in advance of needed date.	Order parts a month before needed. Acquire lead time from supplier for accountability.	F1, Medium
Damage to or Loss of Parts	2 (Failure during testing, improper part care during construction, transportation, or launch)	F (Cannot construct or fly vehicle without spare parts)	F2, High	Have extra parts on hand in case parts need to be replaced, follow all safety procedures for transportation, launch, and construction.	Confirm a minimum number of parts needed so the team is able to obtain duplicates for certain parts. Assign responsibility for more important and expensive parts.	F1, Medium
Rushed Work	3 (Rapidly approaching deadlines, unreasonable schedule expectations)	D (Threats of failure during testing or the final launch due to a lower quality of construction and less attention paid to test data)	D3, Medium	Set deadlines which both keep the project moving at a reasonable pace and leave room for unforeseen circumstances.	Have team leads verify that projects are being completed before the deadline arrives.	D1, Medium
Major Testing Failure	2 (Improper construction of the launch vehicle, insufficient data used	F (Damage to vehicle parts, possible disqualification from the project due to a lack of subscale	F2, High	Ensure parts used fall within specifications of required	Conduct proper tests to ensure that the designs are in fact reliable.	F1, Medium

	before creating the launch vehicle's design)	flight data, an increase in budget for buying new materials, delay in project completion)		use. Take care to perform tests correctly.		
Unavailable Test Launch Area	2 (Failure to locate a proper area to launch subscale launch vehicles for testing, failure to receive an FAA waiver for the test launch)	F (Disqualification from the project due to a lack of subscale flight data)	F2, High	Secure a reliable test launch area and FAA waiver well in advance of the dates on which test launch data is required.	Schedule a launch date a well in advance and set a deadline for when the FAA waiver is to be completed and submitted.	F1, Medium
Loss or Unavailability of Work Area	4 (Construction, building hazards, loss of lab privileges, COVID restrictions imposed by the University)	D (Temporary inability to construct vehicle)	D4, High	Follow work area regulations and have secondary spaces available.	Inform members of proper work area etiquette to prevent loss of lab privileges. Regularly confirm that the team has access to secondary locations if the need arises.	D1, Medium
Failure in Construction Equipment	1 (Improper long-term maintenance of construction equipment, improper use or storage of equipment)	C (Possible long-term delay in construction)	C1, Low	Ensure proper maintenance and use of construction equipment and have backup equipment which can be used in case of an equipment breakdown.	Inspect equipment before and after use to confirm the equipment is functioning properly.	C1, Low
Insufficient Transportation	3 (Insufficient funding or space available to bring all project members to launch sites or workplace)	C (Loss of labor force, team members lose knowledge of what is happening with the project, low attendance to the final launch)	C3, Medium	Organize and budget for transportation early, keep track of dates on which large amounts of transportation are needed.	Organize transportation for at least a month in advance, make sure either enough drivers are secured or buses are rented.	C1, Low
Inactivity / Low Availability of Personnel	3 (Members are unable or unwilling to work due to an increase in classwork or other mandatory activities)	F (Low attendance, loss of team members, labor shortages, inability to construct vehicle)	F3, High	Ensure all team members have an important role in the design process, shift extra personnel resources to needed areas.	Team Leads and Project Management will ensure the Gantt Chart is followed and all members are engaged with the design process.	F1, Medium
Damage by Non-Team Members	1 (Accidental damage caused by other workspace users)	F (Extensive repairs necessary, delay in construction)	F1, Medium	Separate all components from other areas of the workspace as necessary.	Ensure only team members can have access to vehicle components.	F1, Medium
Damage During Transit	2 (Mishandling during transportation)	F (Inability to fly launch vehicle)	F2, High	Protect all launch vehicle components during transit.	Ensure launch vehicle safety secured with padding and bracing.	F1, Medium
Weather Delays	3 (Poor weather conditions during test launches, such as high wind speeds, ice and frost, or storms)	F (Possible disqualification from the project due to a lack of subscale flight data)	F3, High	Have multiple dates available on which test launches can be conducted in case of adverse weather conditions.	Project Management must set adequate launch and backup launch dates.	F1, Medium

6 Project Plan

6.1 Requirements

6.1.1 Internal Requirements Structure Overview

Note: This section is nearly identical to Project Voss Proposal Section 2.1.1 and is included for reference.

After careful analysis of past competitions and NASA requirements, the PSP-SL Project Management team has created a new standard for the team's internal Requirements and Verification Plans (R&VP). This system emphasizes the value of R&VP in guiding the team throughout the year, rather than simply satisfying NASA requests. The Project Management team has created a 10-page R&VP handbook which has been digitally distributed to all team members to aid them in R&VP design. The most relevant information for NASA has been included in the following sections, but the entire handbook can be found at the following link: https://tinyurl.com/pspr-vp.

6.1.1.1 Requirement Types

An important part of the team's new R&VP system is the internal removal of the distinction between NASA requirements and team requirements. While this distinction is made in this report for the sake of NASA review with superscript "^{TD}", the team has internally replaced this distinction with one based on the subject of the requirements. The team has broken up requirements into two categories: Project Requirements and Subteam Requirements. All Project Requirements marked with a "^{TD} and all Subteam Requirements satisfy the NASA definition of a Team Derived Requirement.

6.1.1.2 Project Requirements

Project Requirements include all requirements from NASA as well as high-level requirements created by the PSP-SL Project Management team. All Project requirements are general and describe the overall needs of the mission. Some project requirements are simple enough to be satisfied by a simple verification plan, having a classic verification type: *Demonstration*, *Inspection*, *Analysis*, *Testing* (DIAT). Other requirements are more complicated in which case the requirement is marked as verified by *Prerequisite*. To complete verification by prerequisite, a selected set of subteam requirements must be verified.

6.1.1.3 Subteam Requirements

Subteam requirements are generated independently by the PSP-SL subteams and are generally very specific. By allowing the subteams to create their own requirements, the team ensures that the requirements are as detailed as possible and are strictly relevant to the subteam. These subteam requirements can exist either to directly satisfy a project requirement which is verified by prerequisite or independently, describing a system feature desired by the subteam lead. All subteam requirement verification plans must use DIAT. All subteam requirements satisfy the NASA definition of a team derived requirement.

6.1.1.4 Requirements Numbering

6.1.1.4.1 Subsystem Prefix Table

Within the team, R&VP system subsystem prefixes have been added to all requirements to help members quickly identify the system relevant to the requirement. These prefixes are assigned according to the following table:

Subsystem	Letter	Mnemonic
Social, Business, Outreach, Documentation	N	Non-technical
Airframe and Propulsion	V	Vehicle
Payload	P	Payload
Avionics and Recovery	A	Avionics
AeroBraking Control System	B	Brakes
Standards, Guidelines	G	Guidelines
Systems, Project Management	M	Management

Safety	H	Health
Subteam Identifier (**Not a subsystem)**	S	Subteam

Table 6.1: Subsystem Prefix Table

6.1.1.4.2 NASA Requirements

NASA requirements are numbered with the ID provided by NASA, and a subsystem identifier prefix.

6.1.1.4.3 Team Derived Project Requirements

Project requirements are numbered to emulate the NASA requirements and are added at the end of sections, or as sub-requirements to NASA requirements.

6.1.1.4.4 Subteam Requirements

Subteam requirements are prefixed by an S, the prefix letter of the relevant subteam, and numbers assigned by the subteam lead.

6.1.1.4.5 Verification Plans

The verification plan column of the R&VP tables provides an overview of the protocols the team plans to follow to verify the completion of the given requirement. As the team progresses to CDR, these high-level skeletons will be collected into formal Verification Plan documents, which the team will use to perform the actual verification.

6.1.2 Project Level Requirements

Requirement ID	Requirement Summary	Verification		Verification Plan / Prerequisite Requirement Summary	Status
		Type(s)	Plan ID(s)		
N.1.1	All work will be completed by the team specifically for this year's competition. A mentor will assist with handling of potentially explosive or flammable devices.	D	N/A	PSP-SL members shall demonstrate the new work they have completed through milestone documentation and presentations.	Incomplete
N.1.2	The team will provide and maintain a project plan describing all aspects of the project.	D	N/A	The team will submit an up-to-date project plan with all milestones.	Incomplete
N.1.3	For security reasons Foreign National team members will be identified by PDR.	D	N/A	The team will submit a list of FN team members with PDR.	Incomplete
N.1.4.1-3	The team will create launch week team member roster by CDR consisting of students engaged throughout the year and a single adult mentor.	D	N/A	The team will submit a list of team members and the project mentor with CDR.	Incomplete
N.1.5	The team will engage more than 200 participants in STEM activities.	D	N/A	The team will submit relevant outreach activity forms within two weeks of a given activity.	Incomplete
N.1.5.1[TD]	The team will host virtual software tutorials for its members and the greater college community	D	N/A	The team will submit relevant outreach activity forms within two weeks of a given activity.	Incomplete
N.1.6	The team will establish a social media presence.	D	N/A	The team will submit a list of active team social media accounts.	Incomplete
N.1.7-10	All deliverables will be properly formatted and emailed to the USLI team by the specified deadlines.	D	N/A	The team will submit properly formatted deliverables on time at all milestones.	Incomplete
N.1.7.1	All subteams will complete milestone editing 3 days prior to the official NASA deadline. After this time only the Project Management team will have access to the documentation to perform final edits.	D	N/A	The team will submit properly formatted deliverables on time at all milestones.	Incomplete
N.1.11	The team will use proper teleconferencing equipment for all calls with the USLI team.	D	N/A	The team leads will perform professional video calls for all milestone meetings.	Incomplete
V.1.12	The launch vehicle will use USLI standard launch rails and pad configurations.	I	I.M.1.1	The team will inspect the vehicle and payload design at PDR to ensure compliance with NASA requirements. Relevant design aspects will be frozen after the submission of PDR.	Incomplete
N.1.13	The team will identify an experienced mentor.	D	N/A	The team will submit information about the team mentor in CDR.	Incomplete
N.1.14	The team will track, and report hours spent working on all milestones.	D	N/A	The team will submit member timesheets with all reports.	Incomplete
N.1.14.1[TD]	The team will set up a software tool to allow members to submit their working hours.	D	N/A	The team will submit member timesheets with all reports.	Incomplete
V.2.1	The vehicle's apogee shall be between 3,500 and 5,500 feet.	P		The team will conduct analyses and tests to verify this requirement with the ABCS active and deactivated. This verification will also include the vehicle demonstration flight.	Incomplete

Requirement ID	Requirement Summary	Verification		Verification Plan / Prerequisite Requirement Summary	Status
		Type(s)	Plan ID(s)		
B.2.1.2 TD	The launch vehicle will actively control its apogee using an AeroBraking Control System (ABCS). Using the ABCS, the vehicle will reach within 15the PDR target apogee.	P		The ABCS team will conduct a multifaceted verification of the ABCS system to ensure its ability to function as intended.	Incomplete
N.2.2	The team will declare a target altitude at PDR.	D	N/A	The team will submit its target altitude in PDR.	Incomplete
A.2.3	The launch vehicle shall contain a commercially available barometric altimeter for recording apogee.	I	I.M.1.1	The team will inspect the vehicle and payload design at PDR to ensure compliance with NASA requirements. Relevant design aspects will be frozen after the submission of PDR.	Incomplete
G.2.4	The vehicle shall be designed to be recoverable and reusable.	I	I.M.1.1	The team will inspect the vehicle and payload design at PDR to ensure compliance with NASA requirements. Relevant design aspects will be frozen after the submission of PDR.	Incomplete
G.2.4.1 TD	The vehicle shall withstand all expected flight loads with a minimum safety factor of 1.5.	P		All subteams will independently verify the strength of their subsystems through analysis and testing.	Incomplete
V.2.5	The launch vehicle shall have a maximum of 4 independent sections.	I	I.M.1.1	The team will inspect the vehicle and payload design at PDR to ensure compliance with NASA requirements. Relevant design aspects will be frozen after the submission of PDR.	Incomplete
V.2.5.1-2	Couplers at inflight separation points shall be at least 1 cal in length. Nose cone couplers shall be at least ½ cal in length.	I	I.M.1.1	The team will inspect the vehicle and payload design at PDR to ensure compliance with NASA requirements. Relevant design aspects will be frozen after the submission of PDR.	Incomplete
V.2.6	The launch vehicle shall be able to launch within 2 hours of flight authorization.	D	D.M.2.1	VDF will demonstrate the team's ability to prepare the launch vehicle for flight.	Incomplete
V.2.6.1 TD	The launch vehicle will be assembled in a quality conducive assembly area separate from the launch site. A quality conducive assembly area has (but is not limited to) the following attributes: climate control not necessitating thermal protective clothing, bright overhead lighting, and access to tools and components.	D	D.M.2.1	VDF will demonstrate the team's ability to prepare the launch vehicle for flight.	
V.2.7	The launch vehicle and payload shall be able to remain in the flight ready configuration for at least 2 hours.	P		All subteams will perform battery drain testing on their subsystems.	Incomplete
V.2.7.1 TD	The launch vehicle and payload shall be able to remain in the pre-flight state for at least 18 hours.	P		All subteams will perform battery drain testing on their subsystems.	Incomplete
V.2.7.2 TD	The transition between the pre-flight state and flight ready state will not require the disassembly of the launch vehicle.	I	I.M.3.1	The systems manager will inspect all checklists to ensure procedural compliance.	Incomplete

Requirement ID	Requirement Summary	Verification		Verification Plan / Prerequisite Requirement Summary	Status
		Type(s)	Plan ID(s)		
V.2.8-9	The vehicle shall be capable of being launched via a 12v DC firing system as provided by the launch services provider	I	I.M.1.1	The team will inspect the vehicle and payload design at PDR to ensure compliance with NASA requirements. Relevant design aspects will be frozen after the submission of PDR.	Incomplete
V.2.10	The launch vehicle shall use an APCP motor.	I	I.M.1.1	The team will inspect the vehicle and payload design at PDR to ensure compliance with NASA requirements. Relevant design aspects will be frozen after the submission of PDR.	Incomplete
V.2.10.1-2	The final motor choice shall be declared by CDR. Any changes after CDR must be approved by the RSO.	D	N/A	The team will submit its motor selection in the CDR milestone report.	Incomplete
V.2.11	The launch vehicle will be limited to a single stage.	I	I.M.1.1	The team will inspect the vehicle and payload design at PDR to ensure compliance with NASA requirements. Relevant design aspects will be frozen after the submission of PDR.	Incomplete
V.2.12	The total impulse of the launch vehicle shall not exceed 5120 Ns (L-Class).	I	I.M.1.1	The team will inspect the vehicle and payload design at PDR to ensure compliance with NASA requirements. Relevant design aspects will be frozen after the submission of PDR.	Incomplete
V.2.13.0-3	Pressure vessels on the vehicle must be approved by the RSO and maintain safe standards.	N/A	N/A	No pressure vessels will be included in the vehicles design.	Incomplete
V.2.14	The vehicle shall have a minimum stability margin of 2.0 cal at rail exit.	P	D.M.2.1,	The avionics and construction subteams will independently verify the launch stability of the vehicle. Compliance will also be demonstrated during VDF.	Incomplete
B.2.14.1 [TD]	The ABCS shall not reduce the stability margin below 2.0 cal at any point, under any failure mode.	P	D.M.2.1,	The team will perform FMEA and other analyses on the ABCS system to ensure compliance. Compliance will also be demonstrated during VDF.	Incomplete
V.2.15	The vehicle shall not have any structural protuberance forward of the burnout CoM. Excepting aerodynamically insignificant camera housings.	I/A	I.M.1.1	The team will inspect the PDR design for forward structural protuberances. If any are present, the team will perform CFD analysis to ensure aerodynamic insignificance.	Incomplete
V.2.16	At rail exit the vehicle shall have a minimum velocity of 52fps.	P	D.M.2.1,	The team will perform launch analysis to ensure proper rail exit velocity.	Incomplete
V.2.17	A subscale rocket will be successfully flown by CDR.	D	N/A	The team will submit subscale altimeter data with CDR.	Incomplete
V.2.17.1	The subscale rocket shall resemble and perform similarly to the full-scale rocket but will not be the full-scale rocket.	I	I.M.1.2	The team will inspect the subscale vehicle design at PDR to ensure compliance with NASA requirements. Relevant design aspects will be frozen after the submission of PDR.	Incomplete

Requirement ID	Requirement Summary	Verification		Verification Plan / Prerequisite Requirement Summary	Status
		Type(s)	Plan ID(s)		
V.2.17.2	The subscale rocket shall contain an altimeter to record apogee.	I	I.M.1.2	The team will inspect the subscale vehicle design at PDR to ensure compliance with NASA requirements. Relevant design aspects will be frozen after the submission of PDR.	Incomplete
V.2.17.3	The subscale rocket will be newly constructed for the 2021 competition	I	I.M.1.2	The team will inspect the subscale vehicle design at PDR to ensure compliance with NASA requirements. Relevant design aspects will be frozen after the submission of PDR.	Incomplete
N.2.17.4	Proof of the subscale flight shall be included in CDR	D	N/A	The team will submit subscale altimeter data with CDR.	Incomplete
N.2.18	The team shall complete the following demonstration flights.	P	N.2.18.1-2	The team will verify all prerequisite requirements.	Incomplete
N.2.18.1	The team will fly the launch day vehicle in its final configuration in order to validate its flight capabilities. This Vehicle Demonstration Flight (VDF) has the following success criteria.	P	V.2.18.1.1-9	The team will verify all prerequisite requirements.	Incomplete
G.2.18.1.1	The vehicle and recovery system will have functioned as designed.	P		All subteams will complete post launch system assessments.	Incomplete
N.2.18.1.2	The full-scale rocket must be newly designed and constructed for the 2021 competition.	I	I.M.1.1	The team will inspect the vehicle and payload design at PDR to ensure compliance with NASA requirements. Relevant design aspects will be frozen after the submission of PDR.	Incomplete
P.2.18.1.3	The payload does not have to be flown during VDF.	N/a	N/a	The team overrides this requirement with N.2.18.2.2.	Incomplete
P.2.18.1.3.1-2	If the payload is not flown, a mass simulator will be used to simulate the payload mass and will be located in approximately the same location as the payload CoM.	P		If included, the effect of the payload mass simulator will be quantified by the payload team.	Incomplete
P.2.18.1.4	If the payload effects the external surface of the rocket or manages the total energy of the vehicle, those systems will be active during VDF.	I	I.M.3.1.1	Before VDF, the systems manager will ensure all protrusions and energy management systems are present.	Incomplete
V.2.18.1.5	During VDF, the vehicle shall use the declared launch day motor.	I	I.M.3.1.1	Before VDF, the systems manager will ensure the declared launch day motor is installed in the vehicle.	Incomplete
V.2.18.1.6	The vehicle shall have the launch day ballast configuration for the VDF.	I	I.M.3.1.1	Before VDF, the systems manager will inspect the vehicle for proper ballasting	Incomplete
N.2.18.1.7	The team will not modify the vehicle after VDF without permission from the RSO.	D	N/A	The vehicle present at LRR will be identical to the vehicle discussed in FRR.	Incomplete

Requirement ID	Requirement Summary	Verification		Verification Plan / Prerequisite Requirement Summary	Status
		Type(s)	Plan ID(s)		
N.2.18.1.8	Altimeter data will be provided in the FRR report to prove a successful flight	D	N/A	The team will submit VDF altimeter data in FRR.	Incomplete
N.2.18.1.9	VDF must be completed by the FRR submission deadline. If a re-flight is required, an extension may be granted.	D	N/A	The team will submit VDF altimeter data in FRR	Incomplete
N.2.18.2	The team will fly the launch day payload aboard the launch day rocket in a successful Payload Demonstration Flight. This PDF will be considered successful if the vehicle experiences stable ascent and the following requirements are met.	P	P.2.18.2.1-3	The team will complete all prerequisite requirements for PDF.	Incomplete
P.2.18.2.1	The payload will be fully retained until the intended point of deployment, and all R&D mechanisms will function as intended and suffer no damage	I		All subteams will complete post launch system assessments.	Incomplete
N.2.18.2.2 TD	VDF will contain the final payload system, unless waiting until the completion of the payload would bar the team from satisfying requirement N.2.19.1	I	I.M.3.1	The systems manager will inspect the vehicle for proper installation of the payload system before flight.	Incomplete
G.2.18.2.3 TD	Test launches will only be attempted if all subsystem designs are frozen and thorough assembly protocols have been created.	I	I.M.3.2	The systems manager management team will conduct a survey of subteam leads and confirm their confidence in the vehicles ability to have a safe and successful flight.	Incomplete
N.2.19	An FRR Addendum will be required for teams completing PDF or VDF re-flight after the FRR report deadline.	D	N/A	The team will submit FRR Addendum if required.	Incomplete
N.2.19.1	The FRR Addendum must be submitted for all teams whose circumstances require its submission.	D	N/A	The team will submit FRR Addendum if required.	Incomplete
N.2.19.2	If the PDF fails, the team will not be permitted to fly at the competition launch.	N/A	N/A	N/A	Incomplete
N.2.19.3	If the PDF partially fails, the team may petition the RSO for permission to fly the payload at launch week.	N/A	N/A	N/A	Incomplete
N.2.20	All separable components will have the team's name and Launch Day contact information clearly visible.	I	I.M.3.1	The systems manager will inspect the launch vehicle and payload for proper labeling before all flights.	Incomplete
N.2.22.0-10	The vehicle will not use any of the following prohibited design features or modes: • Forward Firing Motors • Motors that expel titanium sponge • Hybrid Motors • Motor Clusters • Friction Fit Motors • Exceed Mach 1 at any point	I	I.M.1.1	The team will inspect the vehicle and payload design at PDR to ensure compliance with NASA requirements. Relevant design aspects will be frozen after the submission of PDR.	Incomplete

Requirement ID	Requirement Summary	Verification		Verification Plan / Prerequisite Requirement Summary	Status
		Type(s)	Plan ID(s)		
	• Ballast exceeding 10% of the unballasted weight • Transmitters with individual power greater than 250 mW • Transmitters which create excessive interference • Excessive / dense metal. Lightweight metal will be permitted for structural purposes				
V.3.1[TD]	The vehicle will contain an In-Flight Video Recording (IFVR) system to record flight video for downloading after recovery.	P		The IFVR team will verify the functionality of the IFVR system through a variety of DIAT methods.	Incomplete
V.3.1.1[TD]	The IFVR will have at least two sensors, aligned aft and radially, and may have a sensor aligned forward.	I	I.M.1.1	The team will inspect the vehicle and payload design at PDR to ensure compliance with NASA requirements. Relevant design aspects will be frozen after the submission of PDR.	Incomplete
V.3.1.2[TD]	The IFVR will be considered a vehicle element, not a payload experiment.	D	N/A	The construction team will be solely responsible for the IFVR and IFVR documentation will be included in the vehicle construction section of all reports.	Incomplete
A.3.1	Vehicle recovery process will abide by the requirements A.3.1.1 – A.3.1.13	P	A.3.1.1 – A.3.1.13	The team will complete all prerequisite recovery requirements.	Incomplete
A.3.1.1	The main parachute will be deployed no lower than 500 feet.	P		The team will ensure the proper deployment of the main parachute through a variety of verification and design methods	Incomplete
A.3.1.2	The apogee event will contain a delay of no more than 2 seconds.	P		The team will ensure the proper deployment of the drogue parachute through a variety of verification and design methods	Incomplete
A.3.1.3	The motor will not be ejected at any point.	I	I.M.1.1	The team will inspect the vehicle and payload design at PDR to ensure compliance with NASA requirements. Relevant design aspects will be frozen after the submission of PDR.	Incomplete
A.3.1.4 [TD]	The recovery process will be designed to minimize shock to the vehicle.	P		The team will ensure the minimization of shock through various subteam requirements.	Incomplete
A.3.2	The team will perform a ground ejection test for all electronically initiated recovery events.	T	N/A	The team will submit ejection test results with FRR.	Incomplete
A.3.3	Each independent section of the launch vehicle will have a maximum kinetic energy of 75ft-lbf (101J)	P		The team will ensure acceptable landing energy through verification up to and including post launch examination of flight telemetry.	Incomplete
A.3.4	The recovery system will contain redundant, commercially available altimeters.	I	I.M.1.1	The team will inspect the vehicle and payload design at PDR to ensure compliance with NASA	Incomplete

Requirement ID	Requirement Summary	Verification		Verification Plan / Prerequisite Requirement Summary	Status
		Type(s)	Plan ID(s)		
				requirements. Relevant design aspects will be frozen after the submission of PDR.	
A.3.5	Each altimeter will be equipped with a commercially available, dedicated power supply.	I	I.M.1.1	The team will inspect the vehicle and payload design at PDR to ensure compliance with NASA requirements. Relevant design aspects will be frozen after the submission of PDR.	Incomplete
A.3.6	Each altimeter will be armed (placed into the flight-ready state) by a dedicated mechanical arming switch	I	I.M.1.1	The team will inspect the vehicle and payload design at PDR to ensure compliance with NASA requirements. Relevant design aspects will be frozen after the submission of PDR.	Incomplete
A.3.7	The A&R system shall not be capable of disarmament due to flight sources.	P		The team will design and test the avionics bay to ensure that disarmament due to flight sources is impossible.	Incomplete
A.3.8	A&R electrical circuits will be completely independent of payload electrical circuits.	I	I.M.1.1	The team will inspect the vehicle and payload design at PDR to ensure compliance with NASA requirements. Relevant design aspects will be frozen after the submission of PDR.	Incomplete
A.3.9	Removable shear pins will be used for both parachute compartments.	I	I.M.1.1	The team will inspect the vehicle and payload design at PDR to ensure compliance with NASA requirements. Relevant design aspects will be frozen after the submission of PDR.	Incomplete
A.3.10	The recovery area will be limited to a 2,500 ft. radius from the launch pad.	P		The team will verify the acceptability of the recovery area through a variety of methods.	Incomplete
A.3.11	The descent time of the launch vehicle (apogee to touch down) must be less than 90 seconds.	P		The team will verify the acceptability of the vehicle descent time through a variety of methods.	Incomplete
A.3.12	The launch vehicle will have a tracking device which transmits its position to a ground station.	I	I.M.1.1	The team will inspect the vehicle and payload design at PDR to ensure compliance with NASA requirements. Relevant design aspects will be frozen after the submission of PDR.	Incomplete
A.3.12.1	Any untethered component of the launch vehicle will contain a tracking device.	I	I.M.1.1	The team will inspect the vehicle and payload design at PDR to ensure compliance with NASA requirements. Relevant design aspects will be frozen after the submission of PDR.	Incomplete
A.3.12.2	All electronic tracking devices will be fully functional during launch day	I	I.M.3.1	Before launch, the systems manager will inspect all tracking devices' downlinks.	Incomplete
A.3.12.3 [TD]	Any tethered component of the launch vehicle will contain a tracking device.	I	I.M.1.1	The team will inspect the vehicle and payload design at PDR to ensure compliance with NASA requirements. Relevant design aspects will be frozen after the submission of PDR.	Incomplete

Requirement ID	Requirement Summary	Verification		Verification Plan / Prerequisite Requirement Summary	Status
		Type(s)	Plan ID(s)		
A.3.13	The recovery system will not be adversely affected by other electronics devices during flight.	P		The team will verify the electronic resilience of the avionics system through a variety of methods.	Incomplete
A.3.13.1	Recovery system altimeters will be located in a compartment separated from other RF/EM emitting devices.	I	I.M.1.1	The team will inspect the vehicle and payload design at PDR to ensure compliance with NASA requirements. Relevant design aspects will be frozen after the submission of PDR.	Incomplete
A.3.13.2-4	Recovery system electronics will be shielded from other RF/EM emitting devices.	P		The team will verify the electronic resilience of the avionics system through a variety of methods.	Incomplete
P.4.2	The payload will consist of a planetary lander capable of ejection during descent which will self-right during or after landing. After leveling the system will take a 360-degree panoramic photo of the landing site and transmit the photo to the team.	P	P.4.3, D.M.2.2	The team will complete all prerequisite requirements and demonstrate success in the payload demonstration flight.	Incomplete
P.4.3	The landing system will adhere to requirements P.4.3.1.-P.4.3.4.4	P	P.4.3.1.-P.4.3.4.4	The team will complete all prerequisite requirements.	Incomplete
P.4.3.1	The landing system will be completely jettisoned from the launch vehicle between 500 & 1000 ft AGL. The landing system must land within the external borders of the launch field. The landing system will not be tethered to the launch vehicle.	P		Once specific subteam requirements defined by the payload team have been verified, this requirement will be verified.	Incomplete
P.4.3.2	The vehicle will land in an upright orientation or will be capable of self-orienting autonomously.	P		Once specific subteam requirements defined by the payload team have been verified, this requirement will be verified.	Incomplete
P.4.3.3	The landing system will self-level within 5 degrees of vertical.	P		Once specific subteam requirements defined by the payload team have been verified, this requirement will be verified.	Incomplete
P.4.3.3.1	The lander must autonomously self-level.	P		Once specific subteam requirements defined by the payload team have been verified, this requirement will be verified.	Incomplete
P.4.3.3.2	The landing system must record pre- and post-leveling orientation data. This data will be provided in PLAR	P		Once specific subteam requirements defined by the payload team have been verified, this requirement will be verified.	Incomplete
P.4.3.3.2.1	PDF orientation data will be provided in FRR	D	N/A	The team will submit PDF orientation data in FRR.	Incomplete
P.4.3.4	After self-leveling the lander will produce a 360-degree panoramic image of the landing site and transmit it to the team.	P		Once specific subteam requirements defined by the payload team have been verified, this requirement will be verified.	Incomplete
P.4.3.4.1	Image receiving hardware will be located within the team's assigned preparation or viewing area.	D	I.M.3.1	The team will display image receiving hardware to the NASA RSO before launch.	Incomplete

Requirement ID	Requirement Summary	Verification		Verification Plan / Prerequisite Requirement Summary	Status
		Type(s)	Plan ID(s)		
P.4.3.4.2	Only transmitters on board the vehicle during launch will be permitted to operate outside of the preparation or viewing areas.	D	I.M.3.1	The team will display image receiving hardware to the NASA RSO before launch.	Incomplete
P.4.3.4.3	After landing, the payload may use transmitters with a power greater than 250 mW.	N/A	N/A	N/A	Incomplete
P.4.3.4.4	The team will provide the 360-degree panoramic image in PLAR.	D	N/A	The team will submit the final panoramic image in PLAR.	Incomplete
P.4.4	The payload will adhere to requirements P.4.4.1-6	P	P.4.4.1-6	The team will complete all prerequisite requirements.	Incomplete
P.4.4.1	Black Powder and/or similar energetics will only be used for in-flight recovery systems.	I	I.M.1.1	The team will inspect the vehicle and payload design at PDR to ensure compliance with NASA requirements. Relevant design aspects will be frozen after the submission of PDR.	Incomplete
P.4.4.2	Teams will abide by all FAA and NAR rules and regulations.	I	I.M.3.1	The systems manager will inspect the vehicle and payload before launch to confirm FAA and NAR compliance.	Incomplete
P.4.4.4	UAS payloads will be tethered to the vehicle and will not be released until RSO permission has been granted.	D	N/A	The team will inform the RSO of the relative location of the payload throughout flight.	Incomplete
P.4.4.5	UAS payloads will abide with all FAA regulations.	I	I.M.3.1	The systems manager will inspect the vehicle and payload before launch to confirm FAA and NAR compliance.	Incomplete
P.4.4.6	Any UAS weighing more than .55lbs will be registered with the FAA and be marked with its registration number.	I	I.M.3.1	The systems manager will inspect the vehicle and payload before launch to confirm FAA and NAR compliance.	Incomplete
P.4.5 [TD]	The payload team will be responsible for the design, manufacture, and operation of the ABCS	D	N/A	Project management will monitor the proper division of labor across the team.	
H.5.1	The team will use a launch and safety checklist which will be included in FRR and used in LRR and for all launch day operations	D	N/A	The team will submit all checklists with FRR.	Incomplete
M.5.1.1 [TD]	The team will utilize checklists for all pre-flight operations including but not limited to: A&R assembly, Payload assembly, Motor installation, and Vehicle integration.	D	N/A	The systems manager will create and review all checklists before use.	Incomplete
M.5.1.2 [TD]	The team will not launch a vehicle until the Systems Manager is satisfied with the status of all pre-flight checklists.	D	I.M.3.1	The systems manager will receive confirmation of checklist completion from all subteam leads.	Incomplete
H.5.2	The team will identify a student safety officer who is responsible for all sub requirements of requirement M.5.3.	D	N/A	The team will submit information regarding its selected safety officer in the Proposal	Incomplete

Requirement ID	Requirement Summary	Verification		Verification Plan / Prerequisite Requirement Summary	Status
		Type(s)	Plan ID(s)		
H.5.3	Safety officer responsibilities are defined in H.5.3.1 - H.5.5	P	H.5.3.1-H.5.5	The team will complete all prerequisite requirements	Incomplete
H.5.3.1	The safety officer will monitor team activities will an emphasis on safety during operations H.5.3.1.1-9 and H.5.3.2-4.	D	S.1.1	The safety officer will affirm their responsibility for the safety of the team.	Incomplete
H.5.3.1.1-9	Safety officer will oversee all of the following operations: • Vehicle and Payload design • Vehicle and Payload construction • Vehicle and Payload Assembly • Vehicle and Payload ground testing • Subscale launch tests • Full-scale launch tests • Launch Day • Recovery Activities • STEM Engagement Activities	D	S.1.1	The safety officer will affirm their responsibility for the safety of the team.	Incomplete
H.5.3.2	Ensuring the implementation of safety procedures for construction, assembly, launch and recovery.	D	S.1.1	The safety officer will affirm their responsibility for the safety of the team.	Incomplete
H.5.3.3-4	Maintain and lead the development of team hazard analyses, failure mode analyses, and MSDS/chemical inventory data.	D	N/A	The team will submit hazard analyses and FMEAs in all relevant milestone reports.	Incomplete
H.5.4	The team will follow all guidance from the local rocketry clubs RSO and will be in constant communication to ensure safety.	D	S.2.1	All team members will sign pledges affirming their intention to follow all local, state and federal regulations regarding the project.	Incomplete
H.5.5	The team will abide by all rules set by the FAA	D	I.M.3.1	The systems manager will inspect the vehicle and payload before launch to confirm FAA and NAR compliance.	Incomplete
N.6.1	At the NASA Launch Complex, the team must satisfy requirements N.6.1.1-4	P	N.6.1.1-4	The team will complete all prerequisite requirements.	Incomplete
N.6.1.1	Teams must pass LRR during launch week.	D	N/A	The team will pass LRR during launch week.	Incomplete
N.6.1.2	The team mentor must be present for vehicle preparation and launch.	D	S.3.1	The team will not proceed with launch procedures without the team Mentor.	Incomplete
N.6.1.3	The scoring altimeter must be presented to the NASA scoring official upon recovery.	D	N/A	The NASA RSO will receive the scoring altimeter after flight.	Incomplete
N.6.1.4	Teams may only launch once.	D	N/A	The team will only attempt a single flight.	Incomplete
N.6.2.1	At Commercial Spaceport Launch Sites (local launch fields), the team must satisfy requirements N.6.2.1-8.	P	N.6.2.1-8	The team will complete all prerequisite requirements.	Incomplete
N.6.2.1	The launch must occur at a NAR or TRA insured launch.	D	I.M.3.1	The systems manager will inspect the vehicle and payload before launch to confirm FAA and NAR compliance.	Incomplete

Requirement ID	Requirement Summary	Verification		Verification Plan / Prerequisite Requirement Summary	Status
		Type(s)	Plan ID(s)		
N.6.2.2	The launch site RSO will inspect the rocket and payload and determine its flight-readiness.	D	I.M.3.1	The team will not launch until receiving RSO approval.	Incomplete
N.6.2.3	The team mentor must be present for vehicle preparation and launch.	D	S.3.1	The team will not proceed with launch procedures without the team Mentor.	Incomplete
N.6.2.4	The team mentor and Launch Control Officer (LCO) will report any anomalies during ascent or recovery on the Launch Certification and Observations Report (LCOR).	D	N/A	The team will submit LCOR after flight	Incomplete
N.6.2.5	The scoring altimeter will be presented to the team's mentor and the RSO.	D	I.M.3.1	The RSO will receive the altimeter after flight.	Incomplete
N.6.2.6	The mentor, RSO, and LCO will complete all applicable sections in the LCOR.	D	N/A	The team will submit LCOR after flight.	Incomplete
N.6.2.7	The RSO and LCO shall not be affiliated with the team, team members, or academic institution.	D	N/A	The RSO and LCO will affirm their status on the LCOR.	Incomplete
N.6.2.8	Teams may only launch once.	D	N/A	The team will only attempt a single flight.	Incomplete

6.1.3 Vehicle Subteam Requirements

Requirement ID	Requirement Summary	Satisfies Project Requirements:	Verification		Verification Plan / Prerequisite Requirement Summary	Status
			Type(s)	Plan ID(s)		
S.V.1	The nose cone material will not interrupt RF signals.	V.2.17.2	V.2.17.2		Attempt to communicate with components using RF signals through the nosecone.	Incomplete
S.V.2	The vehicle will reach an altitude of 4300' with no effect from airbrakes.	V.2.1	V.2.1		The team will analyze predicted altitude through OpenRocket and RASAero simulations. Data from VDF will be reviewed after flight.	Incomplete
S.V.3	The vehicle and its individual components will withstand at least 2 times the expected stresses without experiencing plastic deformation or destruction at any point during flight.	G.2.4.1	G.2.4.1		The team will perform FEA simulations on all load bearing components and perform nondestructive testing on safety critical components.	Incomplete
S.V.4	The vehicle will remain in proper orientation for the duration of the flight.	V.2.14	V.2.14		OpenRocket or RASAero simulations will model flight path deviation, and the flight path will be monitored during VDF.	Incomplete
S.V.5	Critical flight components will always remain on the interior of the launch vehicle during flight.	V.2.15	V.2.15		Team will use SolidWorks simulations to construct vehicle with vital components secured in the interior which will then be confirmed by inspection during construction.	Incomplete

Requirement ID	Requirement Summary	Satisfies Project Requirements:	Verification		Verification Plan / Prerequisite Requirement Summary	Status
			Type(s)	Plan ID(s)		
S.V.6	The vehicle body and structure will be manufacturable with facilities accessible to the team or purchased as constructed.				All design and purchases will be finalized with confirmation of proper facilities to manufacture said design.	Incomplete
S.V.7	The vehicle will be constructed within the specified mass, diameter, and height limits with the utmost precision as laid out in the proposal sheet to ensure it does not break apart under extreme stress.	V.2.5	V.2.5		Once construction on the rocket is complete it will be compared to all design specifications and measured to ensure compliance.	Incomplete
S.V.8	The vehicle will have its Coefficient of Drag (Cd) determined.				Drop test of a 3d printed scaled airframe model with an accelerometer attached to it and a velocity sensor to measure terminal velocity OR the team will inspect results of the Subscale flight, and apply scaling	Incomplete
S.V.10	IFVR will be able to capture video for three hours continuously.	V.3.1	V.3.1		The fully equipped IFVR system will be run for three continuous hours to verify memory and power capacity	Incomplete
S.V.11	IFVR will capture forward, aft, and outward facing view for entire launch.	V.3.1.1	V.3.1.1		All three cameras will be tested on a mockup of the rocket to verify full video coverage of all viewpoints.	Incomplete
S.V.12	Each subcomponent of the IFVR (one camera, computer, power source and memory card) will not weigh more than 0.5lbm.	V.3.1	V.3.1		All fully assembled subcomponents of the IFVR will be weighed independently.	Incomplete
S.V.13	All protrusions of the IFVR will contain housings that render the protrusions aerodynamically insignificant.	V.3.1	V.3.1		Proper and extensive calculations will be conducted to endure that the housings are aerodynamically insignificant.	Incomplete
S.V.14	The IFVR initiation system will be easily accessible and not require deconstruction.	V.3.1	V.3.1		This design requirement will be demonstrated during construction and verified by successful operation.	Incomplete
S.V.15	The IFVR will contain a notification system as to when the cameras are recording.	V.3.1	V.3.1		The IFVR subsystems will be tested with their corresponding notification systems to ensure that footage is being captured.	Incomplete
S.V.16	The IFVR systems will be secured so that the footage provided is clear and steady.	V.3.1	V.3.1		The IFVR system will be tested in flight conditions and secured and shaking will be analyzed.	Incomplete

6.1.4 Recovery Subteam Requirements

Requirement ID	Requirement Summary	Verification		Verification Plan / Prerequisite Requirement Summary	Status
		Type(s)	Plan ID(s)		
S.A.1	Shock cord will be adequately long for each parachute.	D	VD.A.1	The subscale vehicle launch will verify the shock cord length is appropriate. For the main this will be 60 ft and for the drogue this will be 30 ft.	Incomplete
S.A.1.1	Parachutes will be tied to the shock cord off center to prevent two airframe sections from knocking together after separation.	I, D	VID.A.1.1	The team will inspect the shock cord and parachutes to ensure they are tied together off center. Subscale vehicle launch will demonstrate that the two sections separate without colliding.	Incomplete
S.A.1.2	Shock cord will be z-folded with tape in appropriate increments to prevent tangling while being stored in the vehicle and to reduce shock during deployment.	I	VI.A.1.2	The team will inspect the shock cord stored within the vehicle and ensure it is folded to prevent tangling and reduce shock.	Incomplete
S.A.2	Parachutes will open consistently within an appropriate distance range or time frame to allow for the full deployment after ejection.	T	VT.A.2 (Parachute drop test)	The parachute drop test will verify the drogue and main parachutes successfully deploy at the correct points of flight. For the drogue parachute, this is opening no more than 2 seconds after being released, and for the main parachute, this is no more than 300 ft after being released.	Incomplete
S.A.2.1	Parachutes will be completely protected with a Nomex blanket on the side of the ejection charges.	T	VT.A.2.1 Black powder ejection test	The black powder ejection test will verify the parachutes are completely covered from the ejection chargers.	Incomplete
S.A.2.2	Parachutes will be packed loosely to slide out easily during ejection.	I	VI.A.2.2	The team will inspect parachute packing before each flight.	Incomplete
S.A.2.3	The main parachute will utilize a slide ring to reduce shock loading during deployment.	I	VI.A.2.3	The team will inspect the preparation of the parachute prior to flight and verify the use of a slide ring before launch.	Incomplete
S.A.3	The black powder canisters will create appropriate separation between the avionics bay and each airframe.	T	VT.A.3 Black powder ejection test	The black powder ejection test will verify the black powder canisters are able to create 6' of separation.	Incomplete
S.A.4	All avionics coupler components will be secured throughout the duration of flight. No components will be freely suspended in the compartment.	I	VI.A.4	Team will inspect avionics coupler and ensure components are secured.	Incomplete
S.A.4.1	Avionics coupler components will be organized. Wires and cords will be grouped together to prevent entanglement and damage.	I	VI.A.4.1	Team will inspect avionics coupler and ensure all components are organized and grouped together to prevent entanglement.	Incomplete
S.A.4.2	Avionics coupler components must be able to withstand all shock loads.	D	VD.A.4.2	The subscale launch will verify that all avionics coupler components remain in place throughout the duration of flight.	Incomplete
S.A.5	Altimeters will record accurate readings and perform according functions throughout the duration of flight.	I	VI.A.5	The team will inspect that all altimeter related requirements have been fulfilled before PDR	Incomplete

Requirement ID	Requirement Summary	Verification		Verification Plan / Prerequisite Requirement Summary	Status
		Type(s)	Plan ID(s)		
				submission. Major design considerations will be frozen after this point.	
S.A.5.1	Altimeters will continue to function across all likely flight temperatures.	T	VT.A.5.1 Temperature extreme test	The temperature extreme test will verify the altimeters can achieve continuity and provide readings in a temperature range from 75F to 20F. This range represents the likely temperature extremes for flight scenarios.	Incomplete
S.A.5.2	Both altimeters will achieve and maintain continuity consistently throughout flight.	T	VT.A.5.2 Continuity Test	This test will verify that the two altimeters are able to establish continuity in flight. This will be signaled by specific indications for each altimeter: 3 beeps for the primary altimeter and 3 dits for the secondary altimeter.	Incomplete
S.A.5.3	Altimeters will consistently ignite ejection charges at specific time throughout flight. The primary altimeter will ignite drogue and main charges before the redundant altimeter.	T	VT.A.5.3 Altimeter Ejection Vacuum Test	The altimeter vacuum test will simulate the launch vehicle's climb to apogee and verify each altimeter ignites at the correct time. For the primary altimeter, this means lighting the drogue charge at apogee and the main charge at an altitude of 900 ft. For the secondary altimeter, this means lighting the drogue charge at one second after apogee and the main charge at an altitude of 700 ft.	Incomplete
S.A.6	Altimeter batteries will function properly and ensure successful altimeter function for the duration of flight.	I	VI.A.6	The team will inspect that all battery related requirements have been fulfilled and ensure the coupler design meets flight expectations before PDR. Major design considerations will be frozen from this point forward.	Incomplete
S.A.6.1	Altimeter batteries will supply usable voltage for 1 hour longer than the given pad time of 2 hours.	T	VT.A.6.1 Battery drain test	The battery drain test will verify the altimeter batteries ability to power the altimeters for a 3-hour duration. Voltage readings will be taken every 30 minutes to ensure the altimeters would continuously function.	Incomplete
S.A.6.2	The avionics coupler will include battery shielding or casing to prevent battery damage in case of ballistic impact. This casing must not be compromised by any other coupler components.	I, D	VID.A.6.2	Team will inspect avionics coupler and ensure batteries are correctly located within casings. Subscale vehicle launch will demonstrate the integrity of the casings.	Incomplete
S.A.6.3	Altimeter batteries will not fail to function at any likely launch temperature. They will function properly at a variety of temperature extremes.	T	VT.A.6.3 Temperature extreme test	The battery temperature test will verify the altimeter batteries work at both 75F and 20F temperature extremes. These bounds represent the extremes for likely launch temperatures.	Incomplete
S.A.7	The key switches will prevent disarmament of the altimeter and ejection systems throughout flight. Only	I, D	VID.A.7	The team will inspect the avionics coupler upon launch preparation and ensure the system is	Incomplete

Requirement ID	Requirement Summary	Verification		Verification Plan / Prerequisite Requirement Summary	Status
		Type(s)	Plan ID(s)		
	key switches will be able to engage or disengage these systems.			engaged. The subscale vehicle launch will verify that no flight forces disengage the system.	

6.1.5 Payload Subteam Requirements

Requirement ID	Requirement Summary	Satisfies Project Requirements:	Verification		Verification Plan / Prerequisite Requirement Summary	Status
			Type(s)	Plan ID(s)		
S.P.0	The overall mass of the payload systems shall not exceed [16lbm].	N/A	T		Measure the combined mass of the Payload experiment.	Incomplete
S.P.0.1	The overall mass of the lander subsystem shall not exceed [3lbm].	N/A	T		Measure the individual mass of the Lander subsystem.	Incomplete
S.P.0.2	The overall mass of the retention and deployment subsystem shall not exceed [5lbm].	N/A	T		Measure the individual mass of the R&D.	Incomplete
S.P.0.3	The overall mass of the ABCS shall not exceed [8lbm].	N/A	T		Measure the individual mass of the ABCS.	Incomplete
S.P.1.1	When the lander lands, the lander will remain in an operational state.	G.2.4.1 [TD]	A, D		Test function after landing and analyze possible failure modes.	Incomplete
S.P.1.2	Once deployed and free in the air, the lander should maintain a [6"] clearance from all elements of the main vehicle.	G.2.18.1.1 P.2.18.1.4 P.4.3.1	D		During VDF, demonstrate that no vehicle components collide during descent and stay reasonably outside of this range.	Incomplete
S.P.1.3	The landing distance between any element of the main vehicle and lander should be greater than [10'].	G.2.18.1.1	D		Measure to ensure that the final landing distance is greater than the allotted distance.	Incomplete
S.P.1.4	Upon activation, the lander will fully deploy from the vehicle in under [5s].	P.4.2 P.2.18.2.1 P.4.3.1	D, T		Static test the functionality of the R&D system to deploy in under the allotted time frame.	Incomplete
S.P.1.5	The lander should be able to orient in terrain with a surface irregularity of [5"] maximum crest height relative to trough and with maximum [6'] distance between local crests.	P.4.2 P.4.3.2 P.4.3.3	A, D		Design to reliably function during the projected worst-case geometric situation.	Incomplete

Requirement ID	Requirement Summary	Satisfies Project Requirements:	Verification		Verification Plan / Prerequisite Requirement Summary	Status
			Type(s)	Plan ID(s)		
S.P.1.6	The lander will be deployed under main parachute descent between an altitude of [700'] and 500' AGL.	P.4.2 P.4.3.1	A, D, T		Verify through on-board altimeter data post-landing.	Incomplete
S.P.1.7	The lander must establish signal connectivity with the ground station capable of transmitting the image upon landing.	P.4.2 P.4.3.4	D		Static test of the transmission capability of the sender and receiver.	Incomplete
S.P.1.8	When taking a panoramic photograph, no component of the lander will obstruct the view of the cameras.	P.4.2 P.4.3.4	D		Test PICS to ensure an unobstructed image is captured.	Incomplete
S.P.1.9	Lander must be able to withstand 10 mph wind while grounded without being moved.	P.4.2 P.4.3.2 P.4.3.3	D, T		Test the ability of the Lander to remain upright in an outdoors wind test in conditions similar to those expected at launch.	Incomplete
S.P.1.10	The final panoramic photo produced and transmitted must be of a high enough quality to inspect the lander's surrounding area and horizon.	P.4.2 P.4.3.4	I, T		Test PICS to ensure a high quality image can be produced	Incomplete
S.P.1.11	Both the lander and its associated subsystems must have sufficient battery life to be in a launch-ready state for at least 2 hours.	V.2.7	A, T		All batteries must be drain tested to ensure proper functionality.	Incomplete
S.P.1.12	The lander and its associated subsystems must be able to sustain a pre-flight state for a minimum of 18 hours.	V.2.7.1 [TD]	A, T		All batteries must be drain tested to ensure proper functionality.	Incomplete
S.P.1.13	After the panoramic photo has been produced, the GCS must display the panoramic photo.	P.4.2 P.4.3.4	T		Team verifies the result of image processing after the mission has completed.	Incomplete
S.P.1.14	Camera must be able to take a photo above the maximum dirt level within 10' radius of the landing site by [6"].	P.4.2 P.4.3.4	T		Place the lander in a similar environment as it will be expected to perform in and see it the photos it takes is clear of ground undulations.	Incomplete
S.P.1.15	Lander must be able to transfer image data to ground control station within [1mi].	P.4.2 P.4.3.4	T		Move the lander 1 mile from the GCS and test whether it can transmit the image. Also test if signal is obstructed by ground undulations	Incomplete
S.P.1.16	Lander must be able to land within [1mi] of ground control station.	P.4.3.1 P.4.3.4	A, D		Measure after VDF to ensure that the final landing distance is less than the allotted distance.	Incomplete
S.P.1.17	Lander must have some way to transmit its landing location.	N/A	I		The Lander will contain an operational GPS transmitter throughout the mission.	Incomplete

Requirement ID	Requirement Summary	Satisfies Project Requirements:	Verification		Verification Plan / Prerequisite Requirement Summary	Status
			Type(s)	Plan ID(s)		
S.P.1.18	Payload must be securely contained during flight until deployment.	P.2.18.2.1	A, I, D		The retention subsystem successfully retains the Lander during VDF.	Incomplete
S.P.1.19	The retention method must protect the lander from all flight loads such that it remains operational.	G.2.4.1 TD	A, D		The retention subsystem successfully protects the Lander during VDF	Incomplete
S.P.1.20	Lander system will have team name and launch day contact information clearly visible on the lander itself.	N.2.20	I		The team verifies the presence of both items on the body.	Incomplete
S.P.1.21	Payload system must be able to transition from pre-flight to flight ready without taking apart the rocket, through usage of the GCS.	V.2.7.2 TD	D		The team will demonstrate that the system will be capable of modulating between these states.	Incomplete
S.P.1.22	Lander subsystem must be able to transition to a state of autonomous orientation, through usage of the GCS.	P.4.3.3.1	D		The team will demonstrate that the system will be capable of modulating between these states.	Incomplete
S.P.2.1	The ABCS shall never put the vehicle fins into a stall condition under any failure mode.	B.2.14.1 TD	A, D		The ABCS will be verified utilizing aerodynamic simulation methods. The ABCS will be shown not to induce a stall condition during VDF.	Incomplete
S.P.2.2	The ABCS shall never reduce the stability margin of the vehicle below [2.1cal] under any failure mode.	B.2.14.1 TD	A, D		The team will verify the stability modification of the vehicle through OpenRocket.	Incomplete
S.P.2.3	When used, the ABCS will bring the vehicle altitude to within [100"] of the target apogee.	B.2.1.2 TD	T		The vehicle and ABCS altimeters will produce final apogee data for review.	Incomplete
S.P.2.4	If the ABCS suffers a mechanical failure, the vehicle will not deploy the ABCS.	B.2.14.1 TD G.2.18.1.1	D		The ABCS will be shown to only operate in a completed, non-broken state.	Incomplete
S.P.2.5	The ABCS will only operate after the vehicle burn has completed.	B.2.1.2 TD B.2.14.1 TD	T		The ABCS will be tested to respond to the simulated flight loads associated with a successful burn.	Incomplete
S.P.2.6	The ABCS must be able to fully activate and deactivate control surfaces in under [1s] seconds.	B.2.14.1 TD	T		The ABCS Mechanical Subsystem will be tested to ensure its complete operation time is under the allotted time.	Incomplete
S.P.2.7	The battery powering the ABCS must be able to withstand idle operation for a minimum of 2 hours.	V.2.7	T		Battery drain tests will be conducted on the ABCS.	Incomplete
S.P.2.8	The data output from the inertial sensor must be useful for the MCU. If the output from the MCU is raw data, additional electronics must be designed to convert raw data into a usable format for the MCU.	N/A	D		The inertial sensor can successfully communicate useful data to the MCU.	Incomplete

6.2 Budgeting

6.2.1 Line Item Budget

Below are the items purchased so far for the project. These are not the only items that will be purchased throughout the competition and the table does not include future purchases.

Item	Quantity	Unit Cost	Shipping Cost	Total Cost	Subteam	Manufacturer
T-Slot Corner Bracket	5	$5.25	$28.72	$54.97	Construction	McMaster
2' T-Slot	4	$7.79	$-	$31.16	Construction	McMaster
5' T-Slot	1	$16.28	$-	$16.28	Construction	McMaster
10x 8-32 Rivet Nut	1	$6.95	$-	$6.95	Construction	McMaster
10 1.25" 8-32 Flat Head	1	$6.90	$-	$6.90	Construction	McMaster
100 .75" 8-32 Flat Head	1	$14.51	$-	$14.51	Construction	McMaster
50x 1/2" 5-40 Socket Head	1	$3.14	$6.55	$9.69	ABCS	McMaster
50x 1" 5-40 Socket Head	1	$4.25	$-	$4.25	ABCS	McMaster
1/8" Sleeve Bearing	20	$0.53	$-	$10.60	ABCS	McMaster
8mm Thrust Bearing	1	$8.48	$-	$8.48	ABCS	McMaster
6mm Set Screw Collar	1	$1.74	$-	$1.74	ABCS	McMaster
706c Angular Contact Bearing	1	$19.95	$-	$19.95	ABCS	Amazon
MTSRA8 Lead Screw	1	$25.38	$10.23	$35.61	ABCS	Misumi
100 16mm Retaining Rings	1	$11.43	$-	$11.43	ABCS	McMaster
MTSFR8 Lead Nut	1	$16.92	$-	$16.92	ABCS	Misumi
FMTC10 Linear Bearing	2	$12.55	$26.22	$51.32	ABCS	Pacific Bearing Company
FMT10 Linear Bearing	1	$12.55	$-	$12.55	ABCS	Pacific Bearing Company
300mmx 10mm Linear Shafting (CCM10-0300-SL)	1	$7.93	$-	$7.93	ABCS	Pacific Bearing Company
High-Torque NEMA 17	1	$14.77	$10.63	$25.40	ABCS	StepperOnline
2x 300mAh LiPo	1	$17.69	$-	$17.69	Avionics	Amazon
3" Velcro Cinch Straps	1	$7.99	$-	$7.99	Avionics	Amazon
100x 6-32x.5" Button	1	$3.72	$-	$3.72	Avionics	McMaster
10x Adhesive Mount 1/4" 20 Nut	3	$7.26	$-	$21.78	Construction	McMaster
Velco Cinch Straps	1	$12.97	$-	$12.97	Payload	Amazon
Metric Tap Set	1	$12.37	$-	$12.37	Payload	Amazon
M2 Screw Set	1	$9.99	$-	$9.99	Payload	Amazon
Motor Tube	1	$9.00	$14.93	$23.93	Construction	MadCow
Motor Retainer	1	$12.95	$-	$12.95	Construction	MadCow
1010 Rail button	1	$6.95	$-	$6.95	Construction	MadCow

Item	Quantity	Unit Cost	Shipping Cost	Total Cost	Subteam	Manufacturer
G10 Fiber Glass Sheet 3/32"	1	$14.00	$12.85	$26.85	Construction	Wildman
3" G12 Switch Band	1	$4.00	$12.99	$16.99	Construction	MadCow
3"x38mm Centering Ring	2	$6.00	$-	$12.00	Construction	MadCow
3"x9" Coupler	1	$22.00	$-	$22.00	Construction	MadCow
3" Stacked Bulkhead	2	$10.00	$-	$20.00	Avionics	MadCow
1/4"-20 Eyebolt	1	$3.21	$-	$3.21	Avionics	McMaster
H148R Reload	1	$34.99		$34.99	Construction	Wildman
3"x5' Fiberglass Tube	1	$100.00	$38.87	$138.87	Construction	MadCow
48in. Rocketman High Performance CD 2.2 Parachute	1	$115.00	$-	$115.00	Avionics and Recovery	Rocketman Parachutes
USB Data Transfer Kit	1	$24.95	$9.30	$34.25	Avionics and Recovery	PerfectFlite
144in. Rocketman High Performance CD 2.2 Parachute	1	$385.00	$-	$385.00	Avionics and Recovery	Rocketman Parachutes
StratoLoggerCF Altimeter	1	$54.95	$9.30	$64.25	Avionics and Recovery	PerfectFlite
3" x 24" PVC	1	$5.60	$-	$5.60	Systems	Home Depot
15 5/16-18 Locknut	2	$3.74	$-	$7.48	Systems	Home Depot
3/8 x 250 ft Rope	1	$27.19	$-	$27.19	Systems	Home Depot
3" PVC Flange	1	$16.32	$-	$16.32	Systems	McMaster - Carr
3" PVC 90 deg	1	$11.21	$-	$11.21	Systems	McMaster - Carr
1" PVC Flange	1	$7.01	$-	$7.01	Systems	McMaster - Carr
45mm Bearing	1	$20.99	$-	$20.99	Systems	McMaster - Carr
50 5/16 Spring Washer	1	$13.38	$-	$13.38	Systems	McMaster - Carr
5/16-18 1' Allthread	7	$3.57	$-	$24.99	Systems	McMaster - Carr
10 5/16-18 3/8" Hex Bolt	1	$6.82	$-	$6.82	Systems	McMaster - Carr
1.25 Square Steel Tube	1	$7.99	$-	$7.99	Systems	McMaster - Carr
10 5/16-18 2.75" Hex Bolt	1	$4.11	$-	$4.11	Systems	McMaster - Carr
1"x1"x1' Aluminum Stock	1	$4.92	$-	$4.92	Systems	McMaster - Carr
10 1/2-13 2.5" Hex Bolt	1	$7.49	$-	$7.49	Systems	McMaster - Carr
50 1/2-13 Locknut	1	$10.07	$-	$10.07	Systems	McMaster - Carr
3"x5' PVC	1	$7.92	$-	$7.92	Systems	McMaster - Carr
.25" Thrust Bearing	2	$4.40	$-	$8.80	Systems	Servocity
.25" Set Screw Hub	1	$4.99	$-	$4.99	Systems	Servocity
.25" Set Screw Collar	1	$1.69	$-	$1.69	Systems	Servocity
.25" x 2" D Shaft	1	$1.69	$-	$1.69	Systems	Servocity
2 in Plastic Wheel	1	$3.99	$-	$3.99	Systems	Servocity

Item	Quantity	Unit Cost	Shipping Cost	Total Cost	Subteam	Manufacturer
GoBilda Servo	1	$27.99	$-	$27.99	Systems	Servocity
CUI AMT102 Encoder	1	$23.63	$-	$23.63	Systems	Digikey
Total Cost				$1,606.66		

Table 6.2: Line Item Budget

6.2.2 Funding Plan

This year, the team has started the season with 40% of the total budget, and the remaining funding will likely come from Purdue Department Heads. These asks occurred before October, and so far, the team has acquired 5% of the budget from these asks. The department heads are working with their current finances and the limitations put on them from the financial impact of COVID-19. The remaining shall be evaluated and be acquired through a crowdfunding campaign if not entirely covered by the department heads. In the past, the team has run a majorly successful crowdfunding campaign that raised more than the remaining 55% of the budget, so this is a very viable option should the funding from the department heads not work out.

6.3 Educational Outreach

Though COVID-19 has significantly impacted our ability to organize and attend events within the community, our team has shown outstanding perseverance through their contributions to Purdue Space Day. Through an interactive Livestream spanning several hours on 10/24, we managed to reach over 4,000 participants from 45 states and 4 foreign countries. Some attendees included three of our nine executive board members and many more. Through the Livestream, students from grades 3-8 were engaged in educational demonstrations and follow-along crafts that highlighted topics ranging from constructing mars habitats to CEV design and featured guest appearances from five NASA astronauts. This year's space day successfully reached a wide range of young minds and fostered an interest in STEM.

6.4 Project Gantt Chart

The team is pursuing an accelerated timeline for the project due to Purdue University's extended winter break. Due to this large break, the team is targeting the completion of much of its vehicle manufacturing before Thanksgiving break. The detailed work breakdown can be seen in the following Gantt Chart.

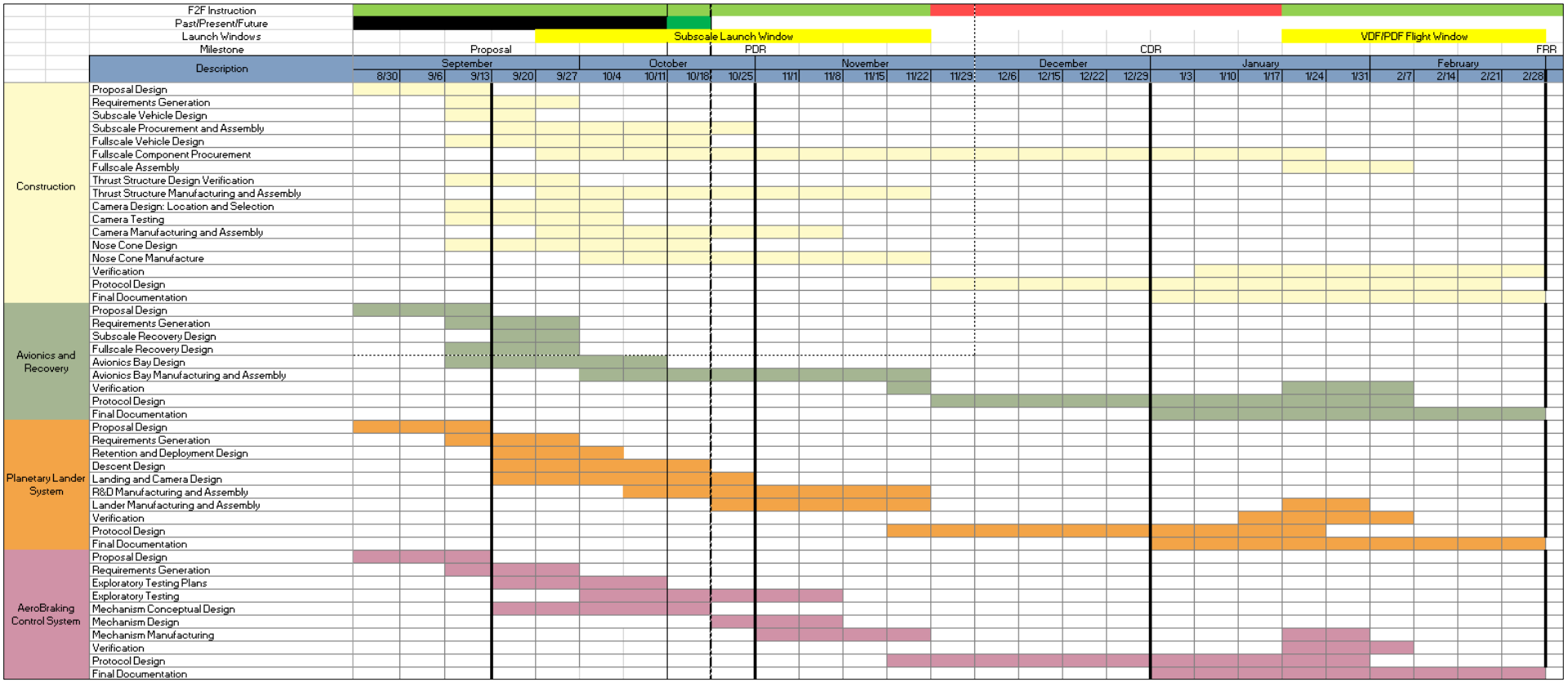

Figure 6.1: Project Gantt Chart Until FRR (03/08/2021)